International
IOR Rectifier

PD - 94735

IRL3803VS
IRL3803VL

HEXFET® Power MOSFET

- Logic-Level Gate Drive
- Advanced Process Technology
- Surface Mount (IRL3803VS)
- Low-profile through-hole (IRL3803VL)
- 175°C Operating Temperature
- Fast Switching
- Fully Avalanche Rated

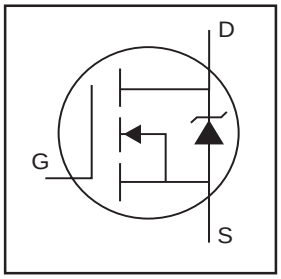

V_{DSS} = 30V

$R_{DS(on)}$ = 5.5mΩ

I_D = 140A⑦

Description

Advanced HEXFET® Power MOSFETs from International Rectifier utilize advanced processing techniques to achieve extremely low on-resistance per silicon area. This benefit, combined with the fast switching speed and ruggedized device design that HEXFET power MOSFETs are well known for, provides the designer with an extremely efficient and reliable device for use in a wide variety of applications.

The D^2Pak is a surface mount power package capable of accommodating die sizes up to HEX-4. It provides the highest power capability and the lowest possible on-resistance in any existing surface mount package. The D^2Pak is suitable for high current applications because of its low internal connection resistance and can dissipate up to 2.0W in a typical surface mount application.

D^2Pak
IRL3803VS

TO-262
IRL3803VL

Absolute Maximum Ratings

	Parameter	Max.	Units
I_D @ T_C = 25°C	Continuous Drain Current, V_{GS} @ 10V ⑧	140⑦	A
I_D @ T_C = 100°C	Continuous Drain Current, V_{GS} @ 10V ⑧	110	
I_{DM}	Pulsed Drain Current ①⑧	470	
P_D @T_A = 25°C	Power Dissipation	3.8	W
P_D @T_C = 25°C	Power Dissipation	200	
	Linear Derating Factor	1.4	W/°C
V_{GS}	Gate-to-Source Voltage	± 16	V
I_{AR}	Avalanche Current①	71	A
E_{AR}	Repetitive Avalanche Energy①	20	mJ
dv/dt	Peak Diode Recovery dv/dt ③⑧	5.0	V/ns
T_J T_{STG}	Operating Junction and Storage Temperature Range	-55 to + 175	
	Soldering Temperature, for 10 seconds	300 (1.6mm from case)	

Thermal Resistance

	Parameter	Typ.	Max.	Units
$R_{\theta JC}$	Junction-to-Case	——	0.74	°C/W
$R_{\theta JA}$	Junction-to-Ambient (PCB Mounted, steady state)⑨	——	40	

07/21/03

Electrical Characteristics @ T_J = 25°C (unless otherwise specified)

	Parameter	Min.	Typ.	Max.	Units	Conditions
$V_{(BR)DSS}$	Drain-to-Source Breakdown Voltage	30	——	——	V	V_{GS} = 0V, I_D = 250µA
$\Delta V_{(BR)DSS}/\Delta T_J$	Breakdown Voltage Temp. Coefficient	——	0.028	——	V/°C	Reference to 25°C, I_D = 1mA ⑧
$R_{DS(on)}$	Static Drain-to-Source On-Resistance	——	——	5.5	mΩ	V_{GS} = 10V, I_D = 71A ④
		——	——	7.5		V_{GS} = 4.5V, I_D = 59A ④
$V_{GS(th)}$	Gate Threshold Voltage	1.0	——	——	V	V_{DS} = V_{GS}, I_D = 250µA ⑧
g_{fs}	Forward Transconductance	82	——	——	S	V_{DS} = 25V, I_D = 71A④⑧
I_{DSS}	Drain-to-Source Leakage Current	——	——	25	µA	V_{DS} = 30V, V_{GS} = 0V
		——	——	250		V_{DS} = 24V, V_{GS} = 0V, T_J = 150°C
I_{GSS}	Gate-to-Source Forward Leakage	——	——	100	nA	V_{GS} = 16V
	Gate-to-Source Reverse Leakage	——	——	-100		V_{GS} = -16V
Q_g	Total Gate Charge	——	——	76	nC	I_D = 71A
Q_{gs}	Gate-to-Source Charge	——	——	19		V_{DS} = 24V
Q_{gd}	Gate-to-Drain ("Miller") Charge	——	——	35		V_{GS} = 4.5V, See Fig. 6 and 13 ⑧
$t_{d(on)}$	Turn-On Delay Time	——	16	——		V_{DD} = 15V
t_r	Rise Time	——	180	——		I_D = 71A
$t_{d(off)}$	Turn-Off Delay Time	——	29	——		R_G = 1.3Ω
t_f	Fall Time	——	37	——		V_{GS} = 4.5V, See Fig. 10 ④⑧
L_D	Internal Drain Inductance	——	4.5	——	nH	Between lead, 6mm (0.25in.) from package and center of die contact 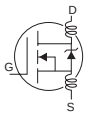
L_S	Internal Source Inductance	——	7.5	——		
C_{iss}	Input Capacitance	——	3720	——	pF	V_{GS} = 0V
C_{oss}	Output Capacitance	——	1480	——		V_{DS} = 25V
C_{rss}	Reverse Transfer Capacitance	——	270	——		f = 1.0MHz, See Fig. 5 ⑧
E_{AS}	Single Pulse Avalanche Energy②⑧	——	1560⑤	400⑥	mJ	I_{AS} = 71A, L = 0.16mH

Source-Drain Ratings and Characteristics

	Parameter	Min.	Typ.	Max.	Units	Conditions
I_S	Continuous Source Current (Body Diode)	——	——	140⑦	A	MOSFET symbol showing the integral reverse p-n junction diode. 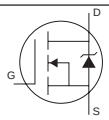
I_{SM}	Pulsed Source Current (Body Diode)①	——	——	470		
V_{SD}	Diode Forward Voltage	——	——	1.2	V	T_J = 25°C, I_S = 71A, V_{GS} = 0V ④
t_{rr}	Reverse Recovery Time	——	52	78	ns	T_J = 25°C, I_F = 71A
Q_{rr}	Reverse Recovery Charge	——	91	140	nC	di/dt = 100A/µs ④⑧
t_{on}	Forward Turn-On Time	Intrinsic turn-on time is negligible (turn-on is dominated by L_S+L_D)				

Notes:

① Repetitive rating; pulse width limited by max. junction temperature. (See fig. 11)

② Starting T_J = 25°C, L = 160µH R_G = 25Ω, I_{AS} = 71A, V_{GS}=10V (See Figure 12)

③ $I_{SD} \leq$ 71A, di/dt $\leq$ 110A/µs, $V_{DD} \leq V_{(BR)DSS}$, $T_J \leq$ 175°C

④ Pulse width $\leq$ 400µs; duty cycle $\leq$ 2%.

⑤ This is a typical value at device destruction and represents operation outside rated limits.

⑥ This is a calculated value limited to T_J = 175°C .

⑦ Calculated continuous current based on maximum allowable junction temperature. Package limitation current is 75A.

⑧ Uses IRL3803 data and test conditions.

⑨ This is applied to D^2Pak, when mounted on 1" square PCB (FR-4 or G-10 Material). For recommended footprint and soldering techniques refer to application note #AN-994.

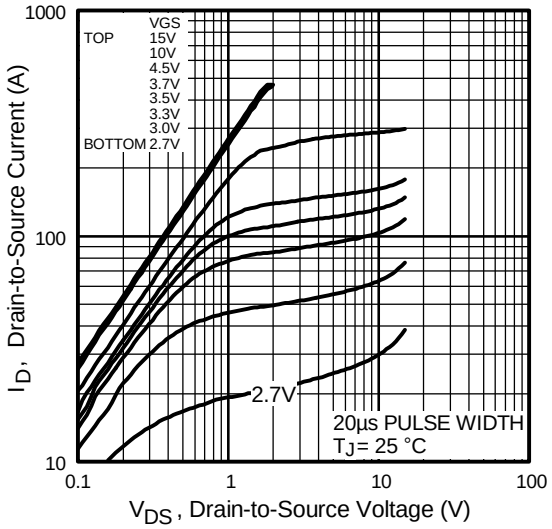

Fig 1. Typical Output Characteristics

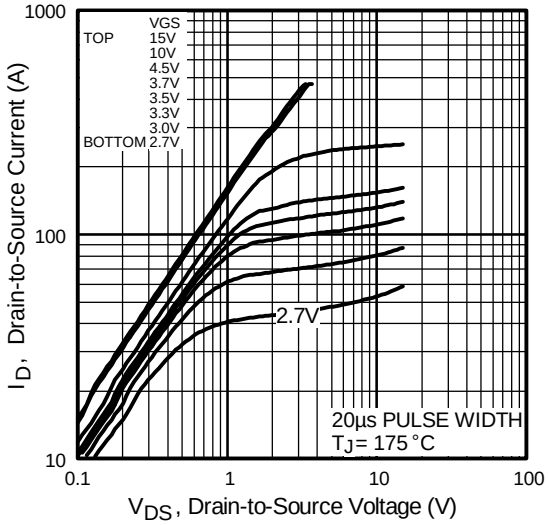

Fig 2. Typical Output Characteristics

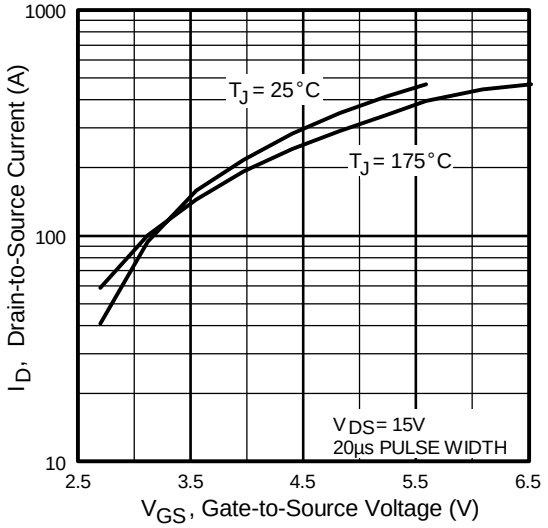

Fig 3. Typical Transfer Characteristics

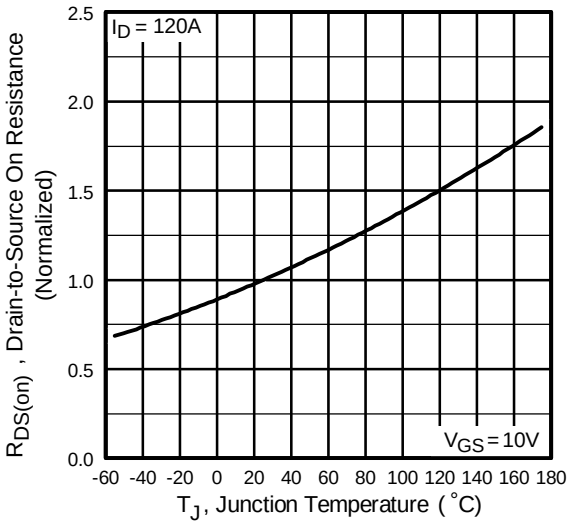

Fig 4. Normalized On-Resistance Vs. Temperature

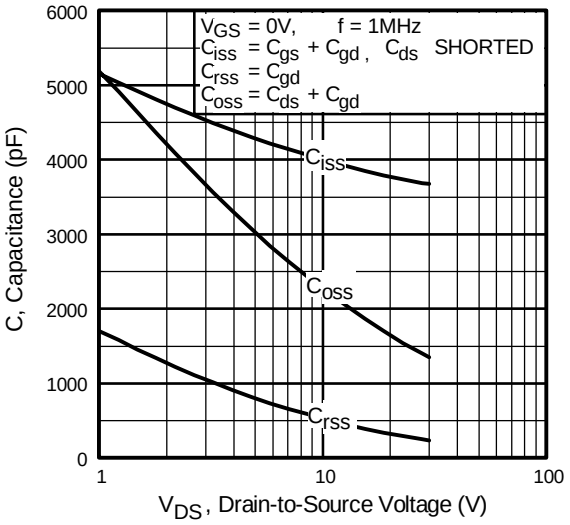

Fig 5. Typical Capacitance Vs. Drain-to-Source Voltage

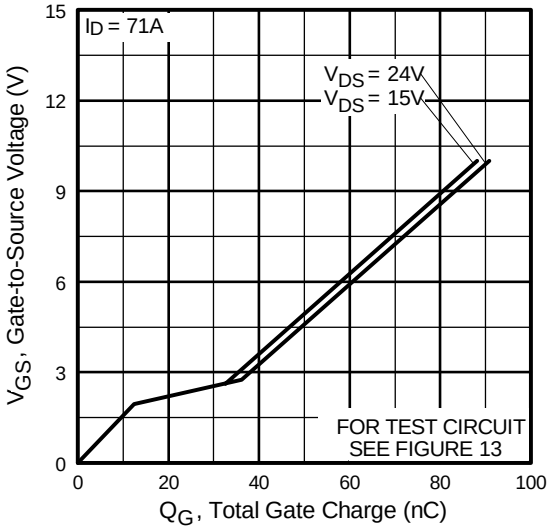

Fig 6. Typical Gate Charge Vs. Gate-to-Source Voltage

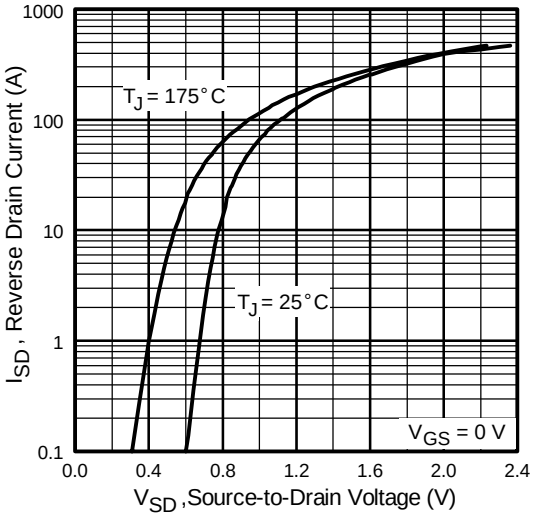

Fig 7. Typical Source-Drain Diode Forward Voltage

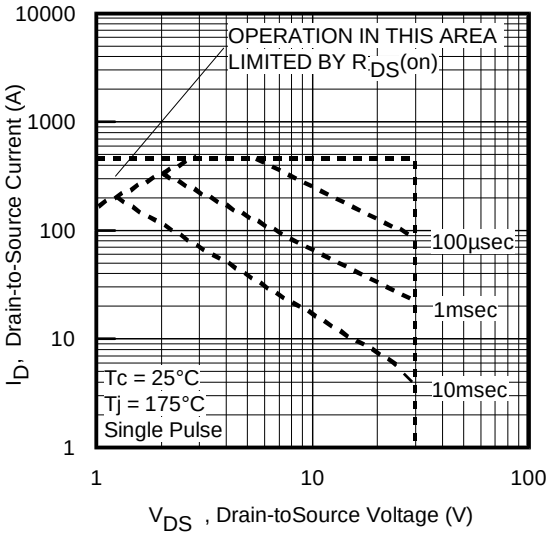

Fig 8. Maximum Safe Operating Area

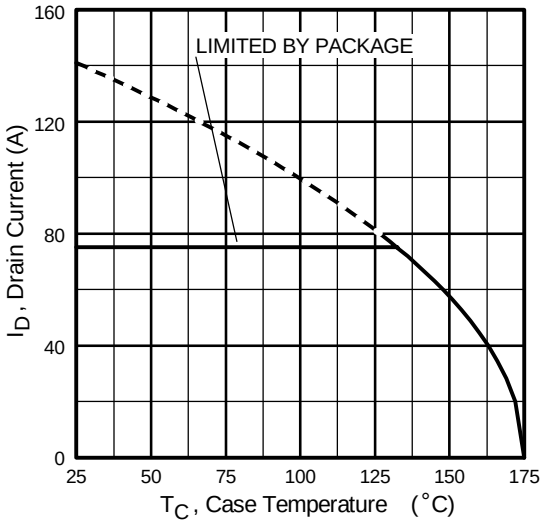

Fig 9. Maximum Drain Current Vs. Case Temperature

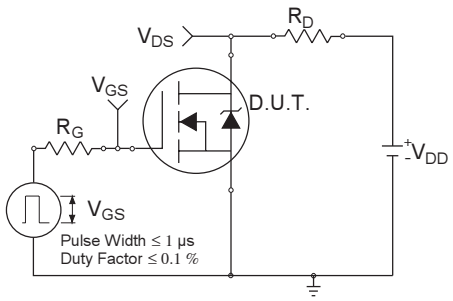

Fig 10a. Switching Time Test Circuit

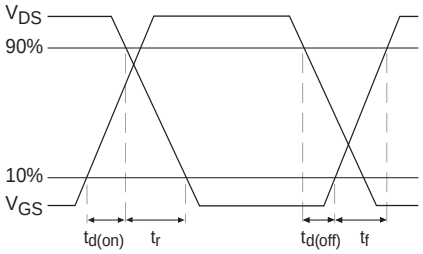

Fig 10b. Switching Time Waveforms

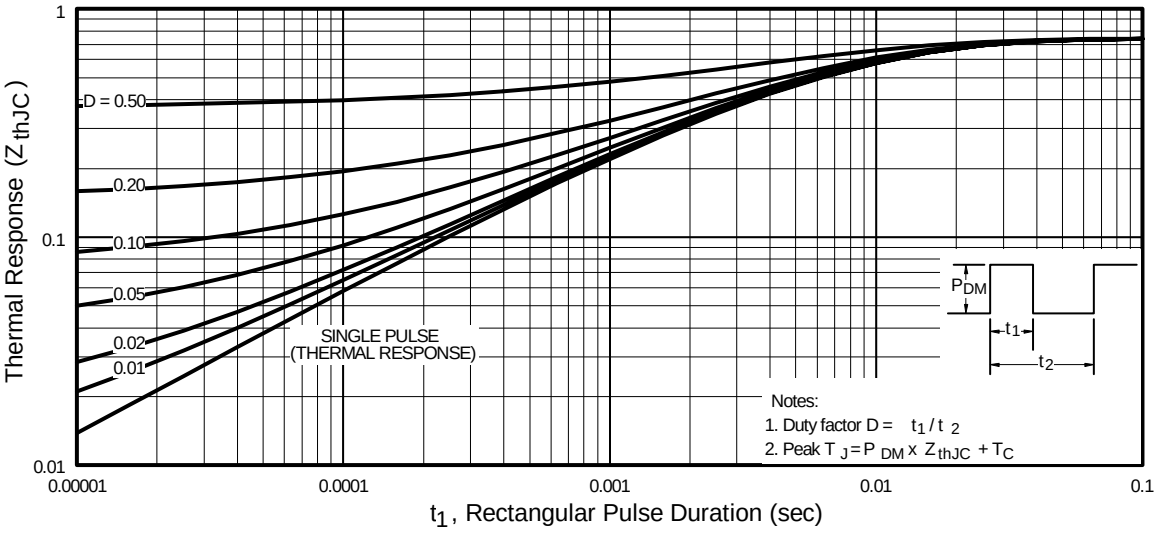

Fig 11. Maximum Effective Transient Thermal Impedance, Junction-to-Case

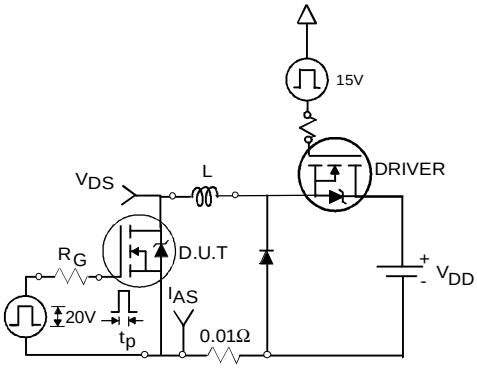

Fig 12a. Unclamped Inductive Test Circuit

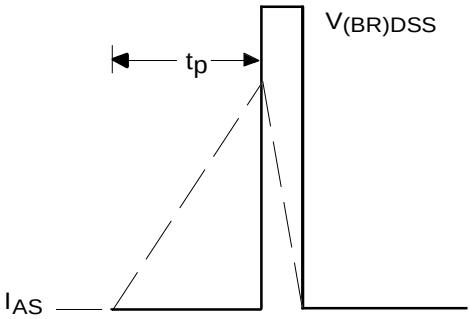

Fig 12b. Unclamped Inductive Waveforms

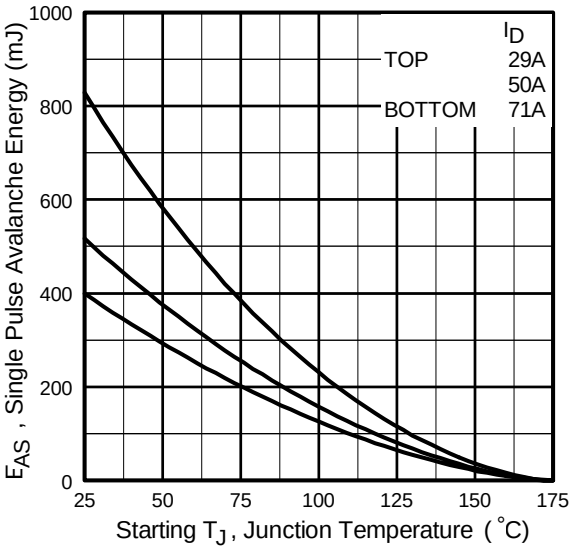

Fig 12c. Maximum Avalanche Energy Vs. Drain Current

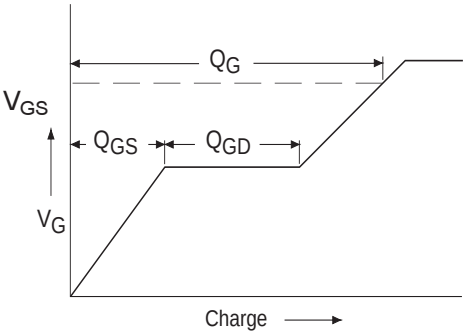

Fig 13a. Basic Gate Charge Waveform

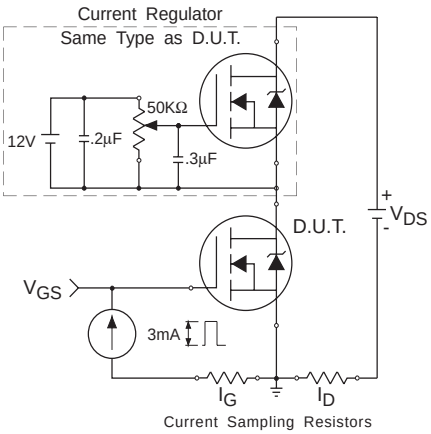

Fig 13b. Gate Charge Test Circuit

Peak Diode Recovery dv/dt Test Circuit

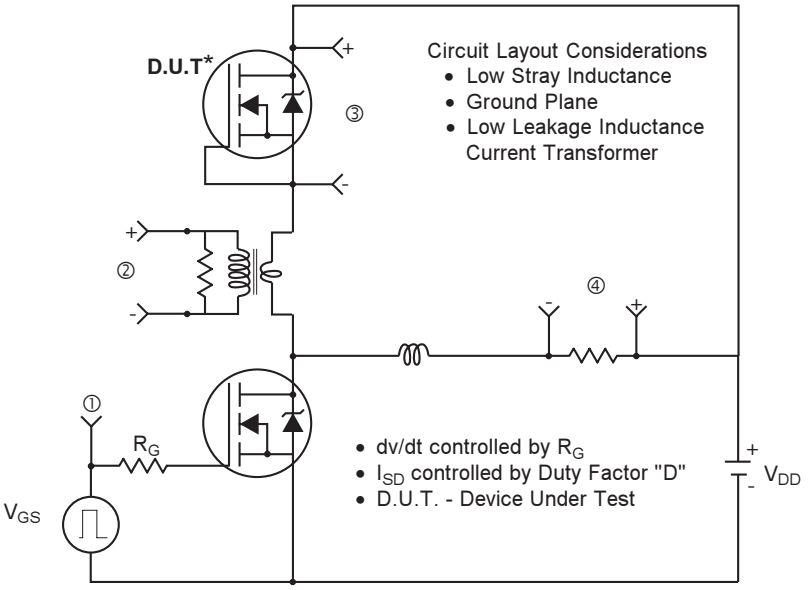

* Reverse Polarity of D.U.T for P-Channel

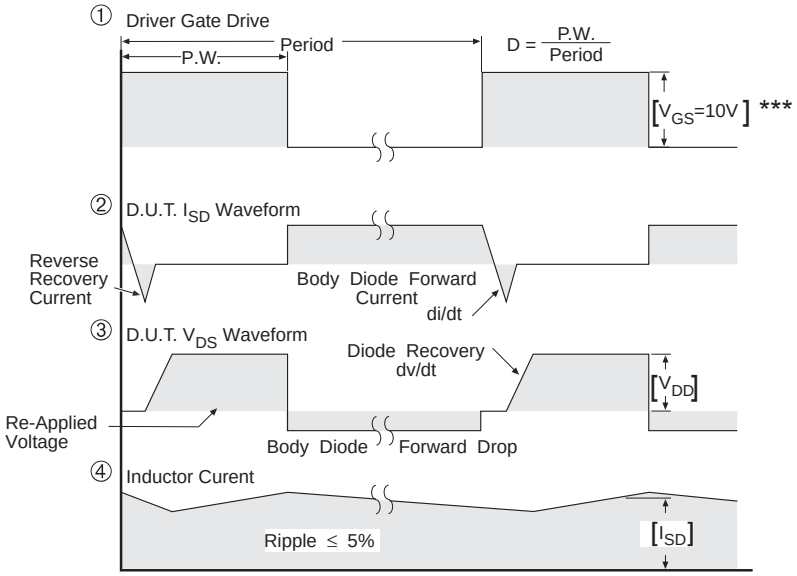

*** V_{GS} = 5.0V for Logic Level and 3V Drive Devices

Fig 14. For N-channel HEXFET® power MOSFETs

International
IOR Rectifier

D^{2}Pak Package Outline

Dimensions are shown in millimeters (inches)

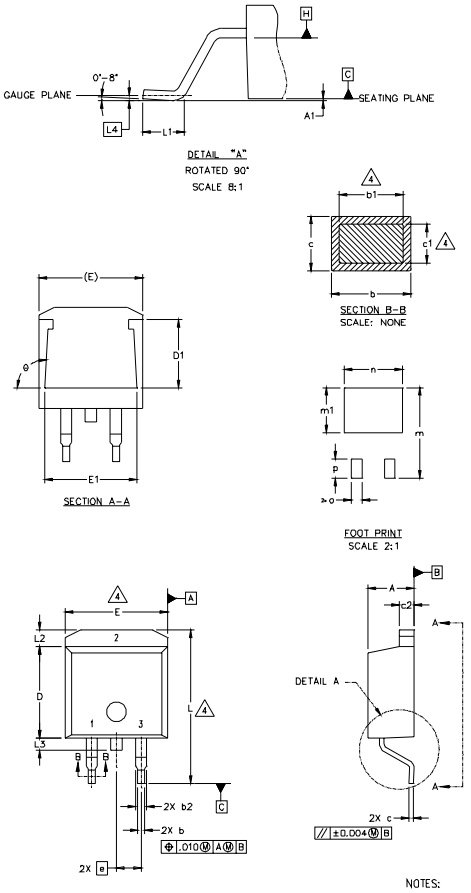

SYMBOL	DIMENSIONS				NOTES
	MILLIMETERS		INCHES		
	MIN.	MAX.	MIN.	MAX.	
A	4.06	4.83	.160	.190	
A1		0.127		.005	
b	0.51	0.99	.020	.039	
b1	0.51	0.89	.020	.035	4
b2	1.14	1.40	.045	.055	
c	0.43	0.63	.017	.025	
c1	0.38	0.74	.015	.029	4
c2	1.14	1.40	.045	.055	
D	8.51	9.65	.335	.380	3
D1	5.33		.210		
E	9.65	10.67	.380	.420	3
E1	6.22		.245		
e	2.54 BSC		.100 BSC		
L	14.61	15.88	.575	.625	
L1	1.78	2.79	.070	.110	
L2		1.65		.065	
L3	1.27	1.78	.050	.070	
L4	0.25 BSC		.010 BSC		
m	17.78		.700		
m1	8.89		.350		
n	11.43		.450		
o	2.08		.082		
p	3.81		.150		
θ	90°	93°	90°	93°	

LEAD ASSIGNMENTS

HEXFET	IGBTs, CoPACK	DIODES
1.- GATE	1.- GATE	1.- ANODE *
2.- DRAIN	2.- COLLECTOR	2.- CATHODE
3.- SOURCE	3.- EMITTER	3.- ANODE

* PART DEPENDENT.

NOTES:

1. DIMENSIONING AND TOLERANCING PER ASME Y14.5M-1994
2. DIMENSIONS ARE SHOWN IN MILLIMETERS [INCHES].
3. DIMENSION D & E DO NOT INCLUDE MOLD FLASH. MOLD FLASH SHALL NOT EXCEED 0.127 [.005"] PER SIDE. THESE DIMENSIONS ARE MEASURED AT THE OUTMOST EXTREMES OF THE PLASTIC BODY.
4. DIMENSION b1 AND c1 APPLY TO BASE METAL ONLY.
5. CONTROLLING DIMENSION: INCH.

D^{2}Pak Part Marking Information

EXAMPLE: THIS IS AN IRF530S WITH
LOT CODE 8024
ASSEMBLED ON WW 02, 2000
IN THE ASSEMBLY LINE "L"

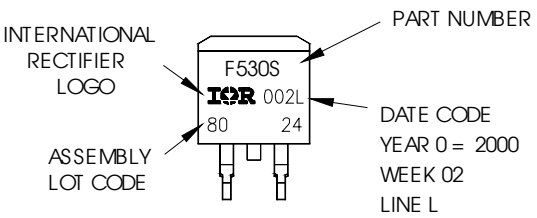

TO-262 Package Outline

Dimensions are shown in millimeters (inches)

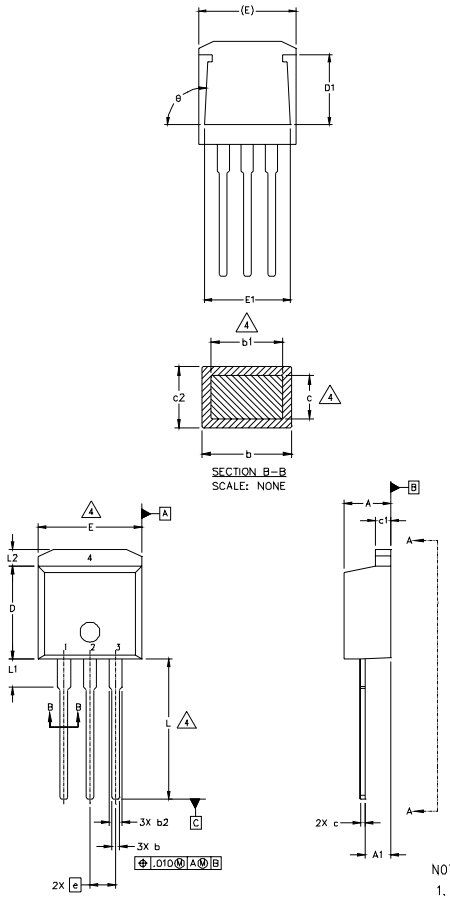

SYMBOL	DIMENSIONS				NOTES
	MILLIMETERS		INCHES		
	MIN.	MAX.	MIN.	MAX.	
A	4.06	4.83	.160	.190	
A1	2.03	2.92	.080	.115	
b	0.51	0.99	.020	.039	
b1	0.51	0.89	.020	.035	4
b2	1.14	1.40	.045	.055	
c	0.38	0.63	.015	.025	4
c1	1.14	1.40	.045	.055	
c2	0.43	.063	.017	.029	
D	8.51	9.65	.335	.380	3
D1	5.33		.210		
E	9.65	10.67	.380	.420	3
E1	6.22		.245		
e	2.54 BSC		.100 BSC		
L	13.46	14.09	.530	.555	
L1	3.56	3.71	.140	.146	
L2		1.65		.065	

LEAD ASSIGNMENTS

HEXFET	IGBT
1.– GATE	1- GATE
2.– DRAIN	2- COLLECTOR
3.– SOURCE	3- EMITTER
4.– DRAIN	

NOTES:

1. DIMENSIONING AND TOLERANCING PER ASME Y14.5M-1994
2. DIMENSIONS ARE SHOWN IN MILLIMETERS [INCHES].
3. DIMENSION D & E DO NOT INCLUDE MOLD FLASH. MOLD FLASH SHALL NOT EXCEED 0.127 [.005"] PER SIDE. THESE DIMENSIONS ARE MEASURED AT THE OUTMOST EXTREMES OF THE PLASTIC BODY.
4. DIMENSION b1 AND c1 APPLY TO BASE METAL ONLY.
5. CONTROLLING DIMENSION: INCH.

TO-262 Part Marking Information

EXAMPLE: THIS IS AN IRL3103L
LOT CODE 1789
ASSEMBLED ON WW 19, 1997
IN THE ASSEMBLY LINE "C"

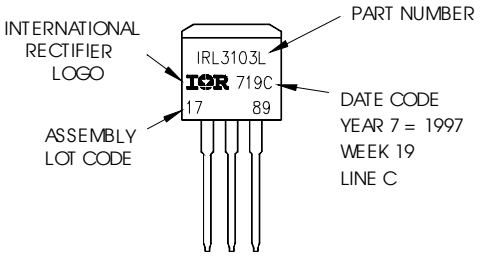

International
IOR Rectifier

D^{2}Pak Tape & Reel Information

Dimensions are shown in millimeters (inches)

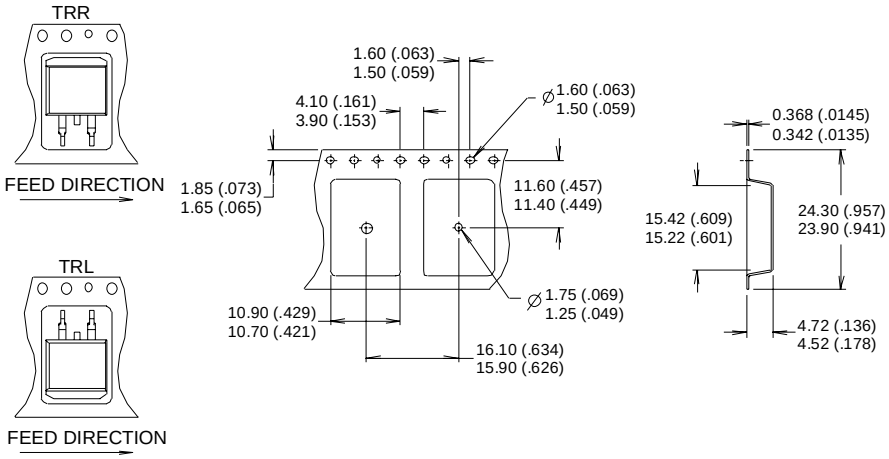

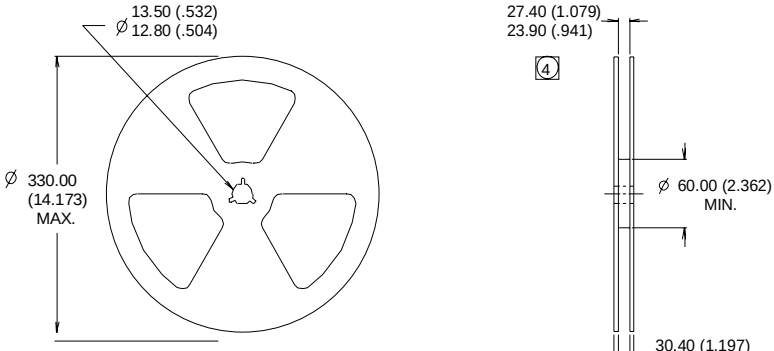

NOTES :
1. COMFORMS TO EIA-418.
2. CONTROLLING DIMENSION: MILLIMETER.
3. DIMENSION MEASURED @ HUB.
4. INCLUDES FLANGE DISTORTION @ OUTER EDGE.

Data and specifications subject to change without notice.
This product has been designed and qualified for the industrial market.
Qualification Standards can be found on IR's Web site.

International
IOR Rectifier

IR WORLD HEADQUARTERS: 233 Kansas St., El Segundo, California 90245, USA Tel: (310) 252-7105
TAC Fax: (310) 252-7903
Visit us at www.irf.com for sales contact information. 07/03

Note: For the most current drawings please refer to the IR website at:
http://www.irf.com/package/