PD - 97073B

IRGB4060DPbF

INSULATED GATE BIPOLAR TRANSISTOR WITH ULTRAFAST SOFT RECOVERY DIODE

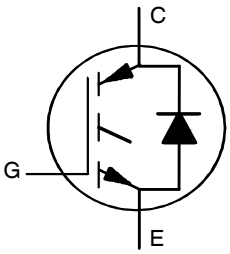

n-channel

V_{CES} = 600V

I_C = 8.0A, T_C = 100°C

t_{sc} > 5µs, T_{jmax} = 175°C

$V_{CE(on)\ typ.}$ = 1.55V

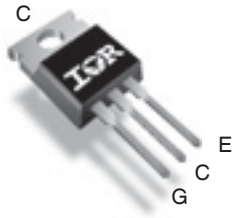

TO-220AB

G	C	E
Gate	Collector	Emitter

Features

- Low $V_{CE\ (on)}$ Trench IGBT Technology
- Low Switching Losses
- Maximum Junction temperature 175 °C
- 5µs SCSOA
- Square RBSOA
- 100% of The Parts Tested for 4X Rated Current (I_{LM})
- Positive $V_{CE\ (on)}$ Temperature Coefficient.
- Ultra Fast Soft Recovery Co-pak Diode
- Tighter Distribution of Parameters
- Lead-Free Package

Benefits

- High Efficiency in a Wide Range of Applications
- Suitable for a Wide Range of Switching Frequencies due to Low $V_{CE\ (ON)}$ and Low Switching Losses
- Rugged Transient Performance for Increased Reliability
- Excellent Current Sharing in Parallel Operation
- Low EMI

Absolute Maximum Ratings

	Parameter	Max.	Units
V_{CES}	Collector-to-Emitter Breakdown Voltage	600	V
I_C@ T_C = 25°C	Continuous Collector Current	16	A
I_C@ T_C = 100°C	Continuous Collector Current	8	
I_{CM}	Pulsed Collector Current	32	
I_{LM}	Clamped Inductive Load Current ①	32	
I_F@T_C=25°C	Diode Continuous Forward Current	16	
I_F@T_C=100°C	Diode Continuous Forward Current	8	
I_{FM}	Diode Maximum Forward Current ②	32	
V_{GE}	Continuous Gate-to-Emitter Voltage	± 20	V
	Transient Gate-to-Emitter Voltage	± 30	
P_D @ T_C =25°	Maximum Power Dissipation	99	W
P_D @ T_C =100°	Maximum Power Dissipation	50	
T_J T_{STG}	Operating Junction and Storage Temperature Range	-55 to + 175	°C
	Soldering Temperature, for 10 seconds	300 (0.063 in. (1.6mm) from case)	

Thermal Resistance

	Parameter	Min.	Typ.	Max.	Units
$R_{\theta JC}$	Junction-to-Case - IGBT ③			1.51	°C/W
$R_{\theta JC}$	Junction-to-Case - Diode ③			3.66	
$R_{\theta CS}$	Case-to-Sink, flat, greased surface		0.5		
$R_{\theta JA}$	Junction-to-Ambient, typical socket mount ③		80		
Wt	Weight		1.44		g

9/22/06

Electrical Characteristics @ T_J = 25°C (unless otherwise specified)

	Parameter	Min.	Typ.	Max.	Units	Conditions	Ref.Fig
$V_{(BR)CES}$	Collector-to-Emitter Breakdown Voltage	600	—	—	V	V_{GE} = 0V, I_c =100 µA ④	CT6
$\Delta V_{(BR)CES}/\Delta T_J$	Temperature Coeff. of Breakdown Voltage	—	0.3	—	V/°C	V_{GE} = 0V, I_c = 250 µA (25 -175 °C) ④	
$V_{CE(on)}$	Collector-to-Emitter Saturation Voltage	—	1.55	1.85		I_C = 8A, V_{GE} = 15V, T_J = 25°C	
		—	2.00	—	V	I_C = 8A, V_{GE} = 15V, T_J = 150°C	5,6,7,9,
		—	1.95	—		I_C = 8A, V_{GE} = 15V, T_J = 175°C	10 ,11
$V_{GE(th)}$	Gate Threshold Voltage	4.0		6.5	V	V_{CE} = V_{GE}, I_C = 250 µA	9,10,11,12
$\Delta V_{GE(th)}/\Delta TJ$	Threshold Voltage temp. coefficient	—	-18	—	mV/°C	V_{CE} = V_{GE}, I_C = 250 µA (25 -175 °C)	
gfe	Forward Transconductance	—	5.6	—	S	V_{CE} = 50V, I_C = 8A, PW =80µs	
I_{CES}	Collector-to-Emitter Leakage Current	—	1	25	µA	V_{GE} = 0V,V_{CE} = 600V	8
		—	400	—	µA	V_{GE} = 0v, V_{CE} = 600V, T_J =175°C	
V_{FM}	Diode Forward Voltage Drop	—	1.80	2.80	V	I_F = 8A	
		—	1.30	—		I_F = 8A, T_J = 175°C	
I_{GES}	Gate-to-Emitter Leakage Current	—	—	±100	nA	V_{GE} = ± 20 V	

Switching Characteristics @ T_J = 25°C (unless otherwise specified)

	Parameter	Min.	Typ.	Max.	Units	Conditions	Ref.Fig
Q_g	Total Gate Charge (turn-on)	—	19	29		I_C = 8A	24
Q_{ge}	Gate-to-Emitter Charge (turn-on)	—	5	7	nC	V_{CC} = 400V	CT1
Q_{gc}	Gate-to-Collector Charge (turn-on)	—	8	12		V_{GE} = 15V	
E_{on}	Turn-On Switching Loss	—	70	115		I_C = 8A, V_{CC} = 400V, V_{GE} = 15V	
E_{off}	Turn-Off Switching Loss	—	145	195	µJ	R_G = 47Ω, L=1mH, L_S= 150nH, T_J = 25°C	CT4
E_{total}	Total Switching Loss	—	215	310		Energy losses include tail and diode reverse recovery	
$t_{d(on)}$	Turn-On delay time	—	30	39		I_C = 8A, V_{CC} = 400V	
t_r	Rise time	—	15	21	ns	R_G = 47Ω, L=1mH, L_S= 150nH	CT4
$t_{d(off)}$	Turn-Off delay time	—	95	106		T_J = 25°C	
t_f	Fall time	—	20	26			
E_{on}	Turn-On Switching Loss	—	165	—		I_C = 8A, V_{CC} = 400V, V_{GE} = 15V	13,15
E_{off}	Turn-Off Switching Loss	—	240	—	µJ	R_G = 47Ω, L=1mH, L_S= 150nH, T_J = 175°C	CT4
E_{total}	Total Switching Loss	—	405	—		Energy losses include tail and diode reverse recovery	WF1,WF2
$t_{d(on)}$	Turn-On delay time	—	28	—		I_C = 8A, V_{CC} = 400V	14,16
t_r	Rise time	—	17	—	ns	R_G = 47Ω, L=1mH, L_S= 150nH	CT4
$t_{d(off)}$	Turn-Off delay time	—	117	—		T_J = 175°C	WF1,WF2
t_f	Fall time	—	35	—			
C_{ies}	Input Capacitance	—	535	—		V_{GE} = 0V	22
C_{oes}	Output Capacitance	—	45	—	pF	V_{CC} = 30V	
C_{res}	Reverse Transfer Capacitance	—	15	—		f = 1Mhz	
RBSOA	Reverse Bias Safe Operating Area	FULL SQUARE				T_J = 175°C, I_C = 32A V_{CC} = 480V, Vp =600V R_G = 47Ω, V_{GE} = +15V to 0V	4 CT2
SCSOA	Short Circuit Safe Operating Area	5			µs	V_{CC} = 400V, Vp =600V R_G = 47Ω, V_{GE} = +15V to 0V	22, CT3 WF4
Erec	Reverse recovery energy of the diode		165		µJ	T_J = 175°C	17,18,19
trr	Diode Reverse recovery time		60		ns	V_{CC} = 400V, I_F = 8A	20,21
Irr	Peak Reverse Recovery Current		14		A	V_{GE} = 15V, Rg = 47Ω, L=1mH, L_S=150nH	WF3

Notes:

① V_{CC} = 80% (V_{CES}), V_{GE} = 15V, L = 100 µH, R_G = 47 Ω.
② Pulse width limited by max. junction temperature.
③ R_θ is measured at T_J approximately 90°C
④ Refer to AN-1086 for guidelines for measuring $V_{(BR)CES}$ safely

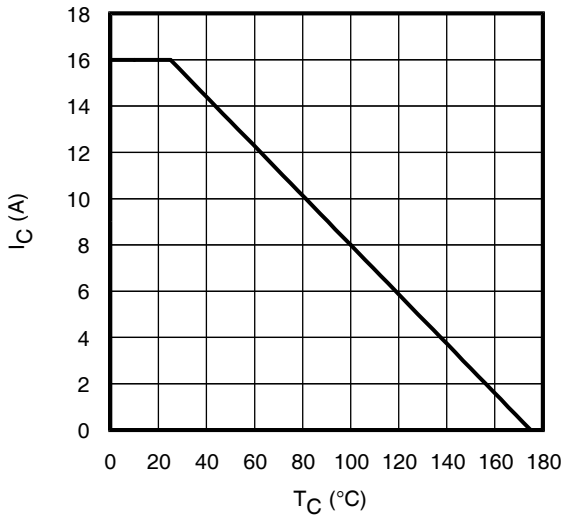

Fig. 1 - Maximum DC Collector Current vs. Case Temperature

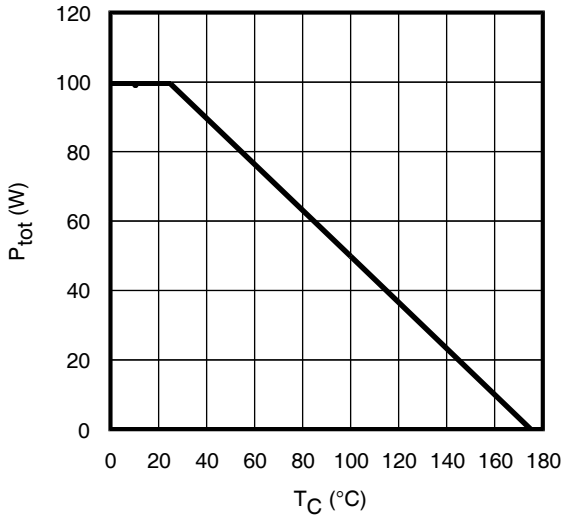

Fig. 2 - Power Dissipation vs. Case Temperature

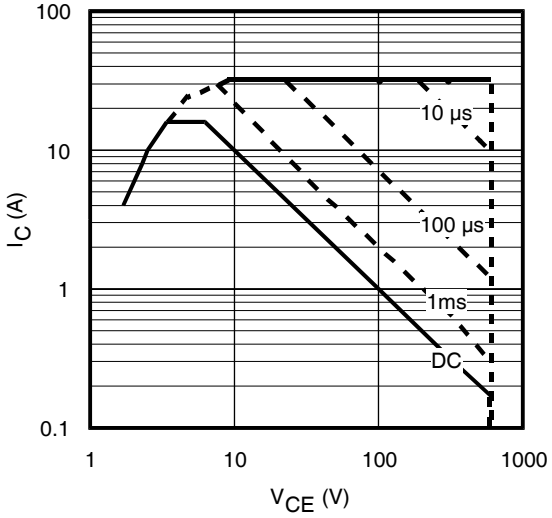

Fig. 3 - Forward SOA,
T_C = 25°C; $T_J \leq$ 175°C

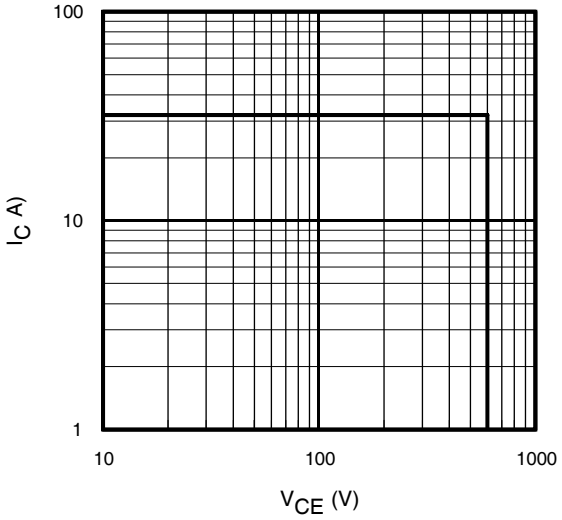

Fig. 4 - Reverse Bias SOA
T_J = 175°C; V_{CE} = 15V

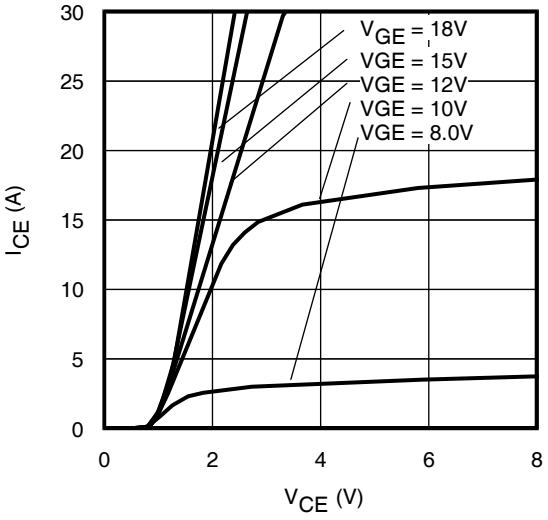

Fig. 5 - Typ. IGBT Output Characteristics
T_J = -40°C; tp = 80µs

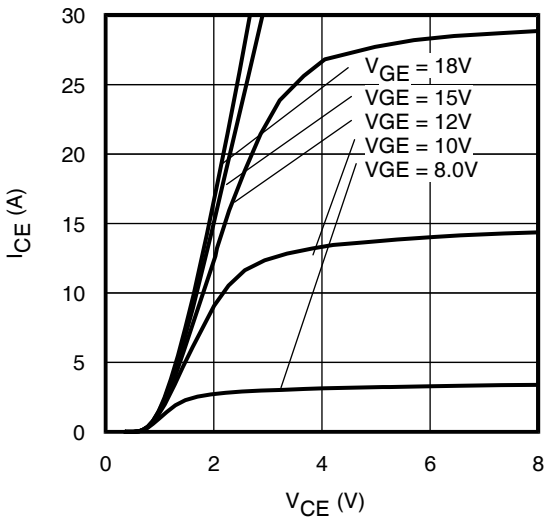

Fig. 6 - Typ. IGBT Output Characteristics
T_J = 25°C; tp = 80µs

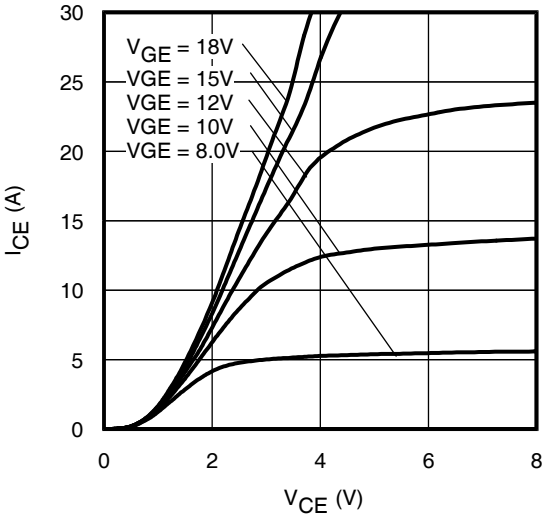

Fig. 7 - Typ. IGBT Output Characteristics
T_J = 175°C; tp = 80µs

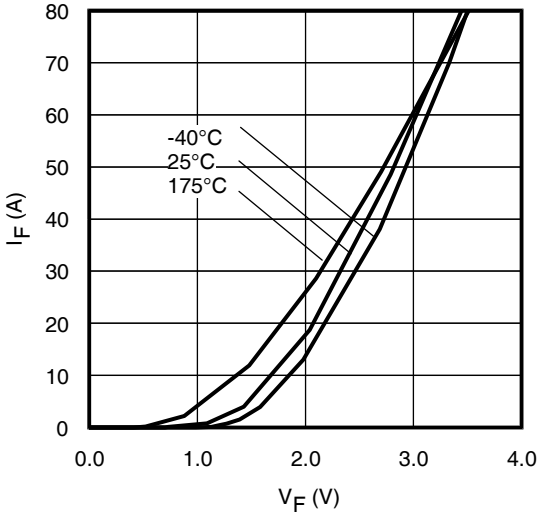

Fig. 8 - Typ. Diode Forward Characteristics
tp = 80µs

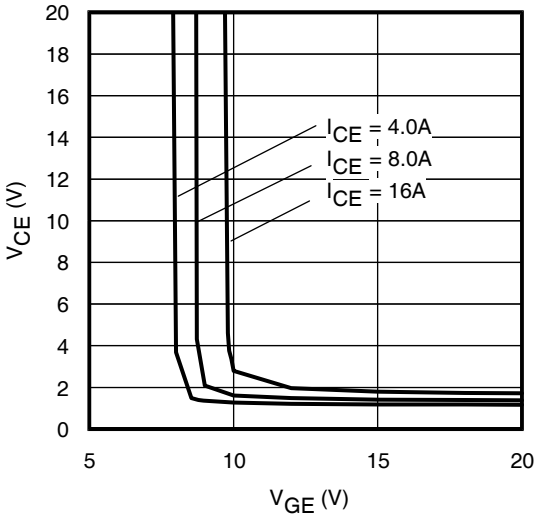

Fig. 9 - Typical V_{CE} vs. V_{GE}
T_J = -40°C

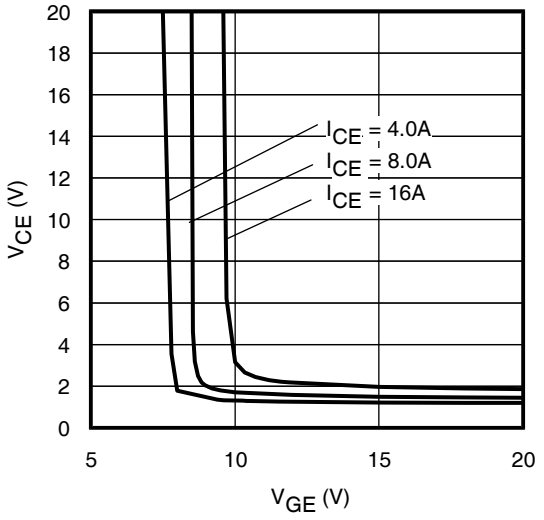

Fig. 10 - Typical V_{CE} vs. V_{GE}
T_J = 25°C

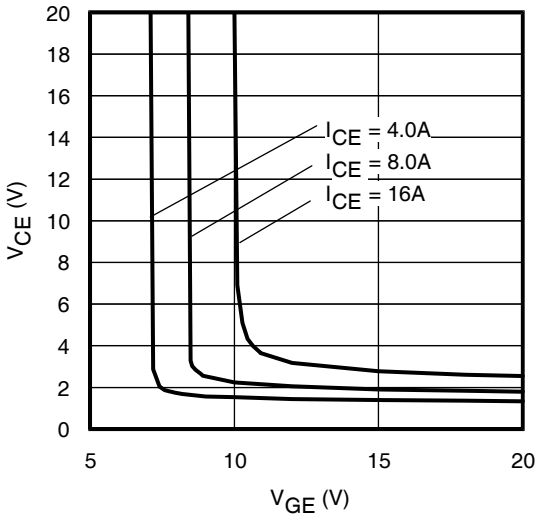

Fig. 11 - Typical V_{CE} vs. V_{GE}
T_J = 175°C

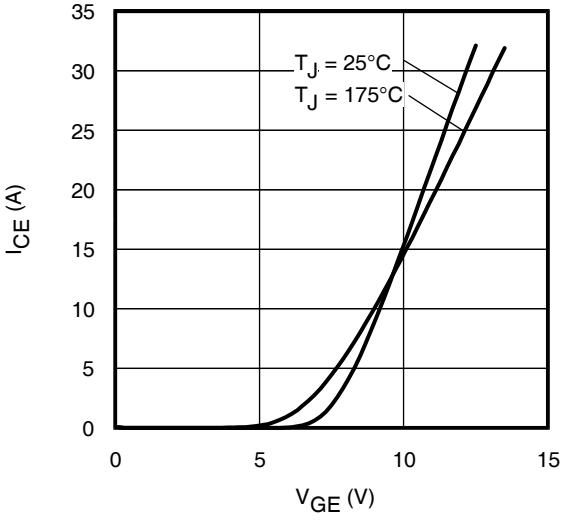

Fig. 12 - Typ. Transfer Characteristics
V_{CE} = 50V; tp = 10µs

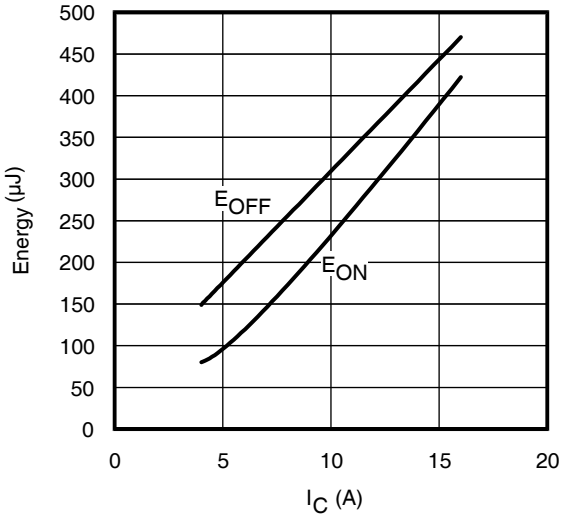

Fig. 13 - Typ. Energy Loss vs. I_C
T_J = 175°C; L = 1mH; V_{CE} = 400V, R_G = 47Ω; V_{GE} = 15V.

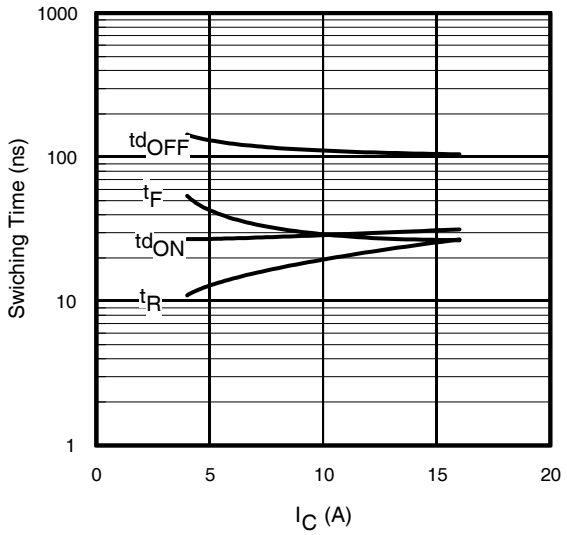

Fig. 14 - Typ. Switching Time vs. I_C
T_J = 175°C; L=1mH; V_{CE}= 400V
R_G= 47Ω; V_{GE}= 15V

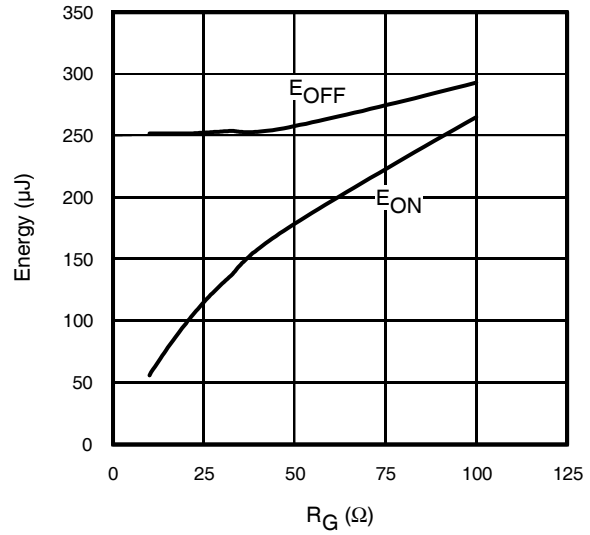

Fig. 15 - Typ. Energy Loss vs. R_G
T_J = 175°C; L = 1mH; V_{CE} = 400V, I_{CE} = 8A; V_{GE} = 15V

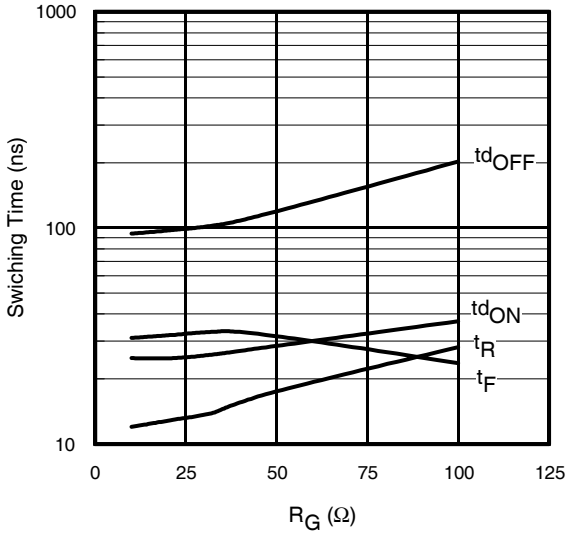

Fig. 16- Typ. Switching Time vs. R_G
T_J = 175°C; L=1mH; V_{CE}= 400V
I_{CE}= 8A; V_{GE}= 15V

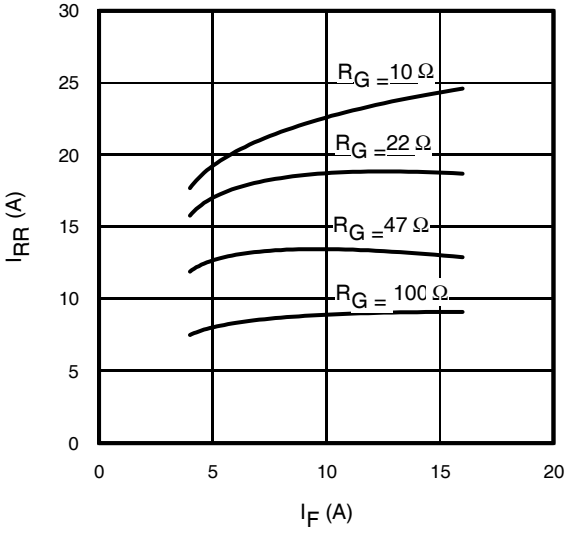

Fig. 17 - Typical Diode I_{RR} vs. I_F
T_J = 175°C

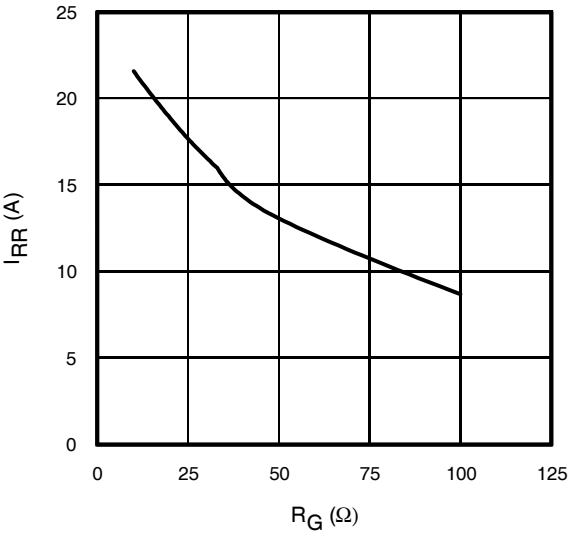

Fig. 18 - Typical Diode I_{RR} vs. R_G
T_J = 175°C; I_F = 8.0A

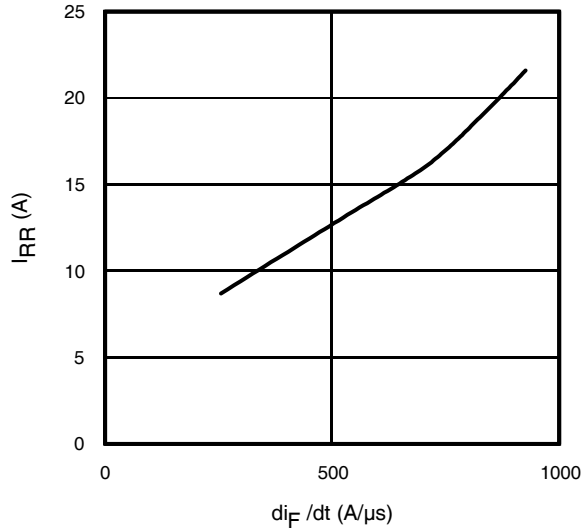

Fig. 19- Typical Diode I_{RR} vs. di_F/dt
V_{CC}= 400V; V_{GE}= 15V;
I_{CE}= 8A; T_J = 175°C

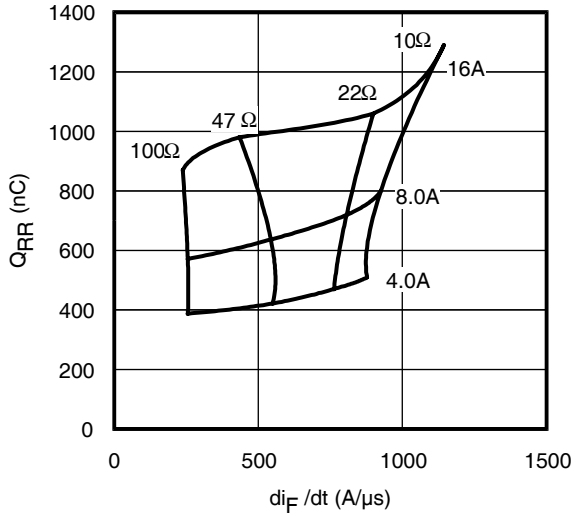

Fig. 20 - Typical Diode Q_{RR}
V_{CC}= 400V; V_{GE}= 15V; T_J = 175°C

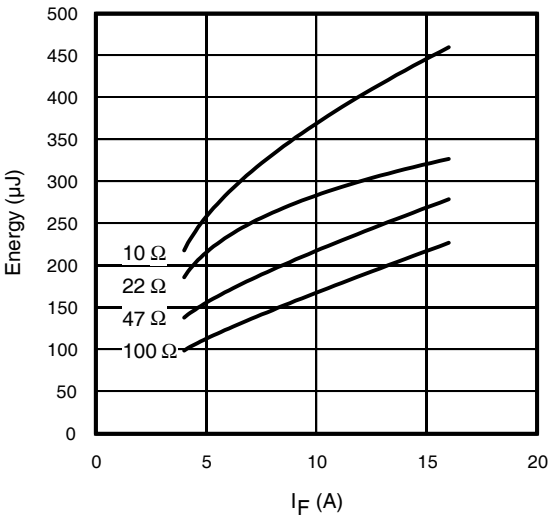

Fig. 21 - Typical Diode E_{RR} vs. I_F
T_J = 175°C

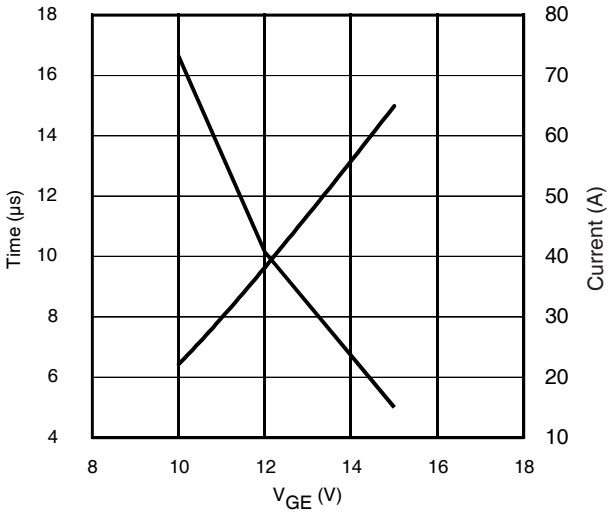

Fig. 22- Typ. V_{GE} vs Short Circuit Time
V_{CC}=400V, T_C =25°C

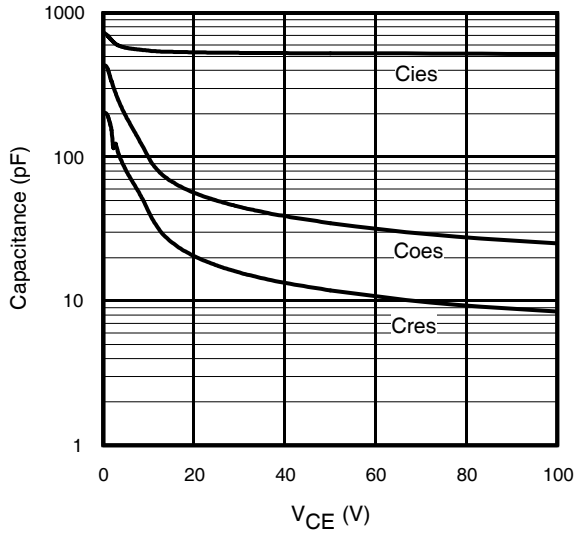

Fig. 23- Typ. Capacitance vs. V_{CE}
V_{GE}= 0V; f = 1MHz

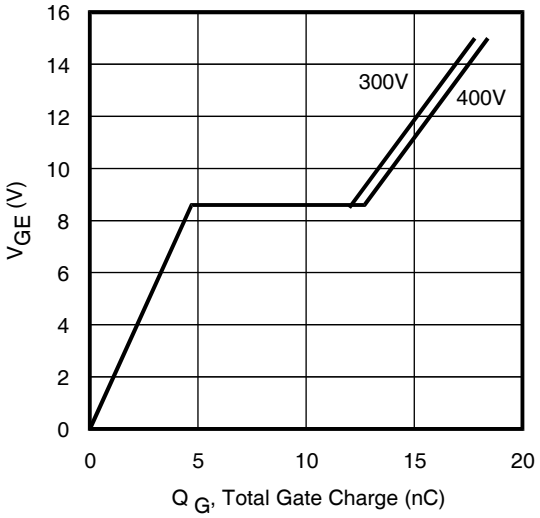

Fig. 24 - Typical Gate Charge vs. V_{GE}
I_{CE} = 8A, L=600µH

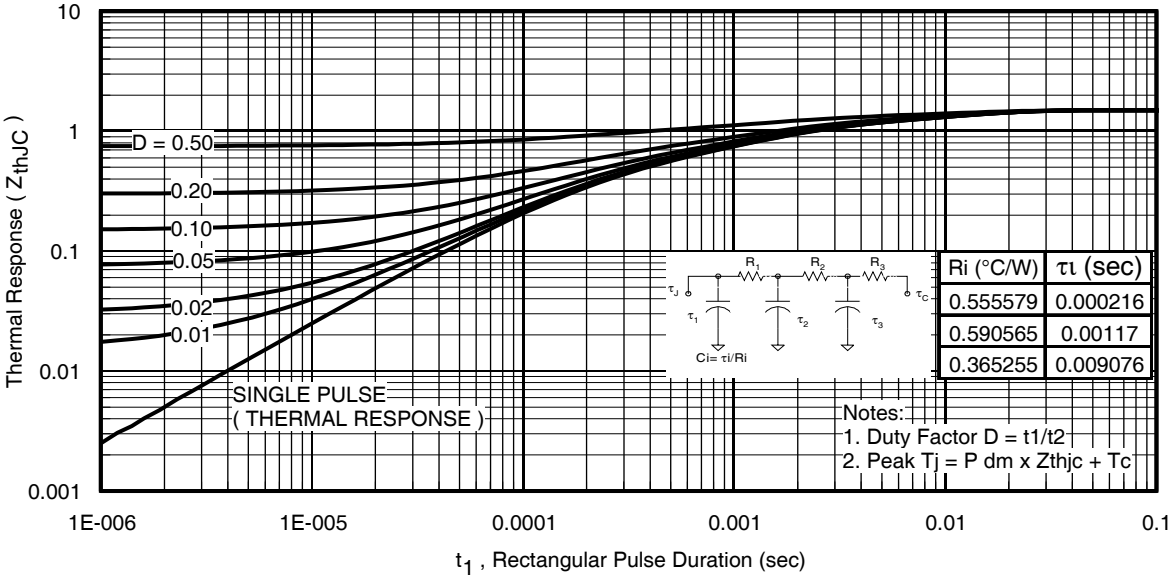

Fig 25. Maximum Transient Thermal Impedance, Junction-to-Case (IGBT)

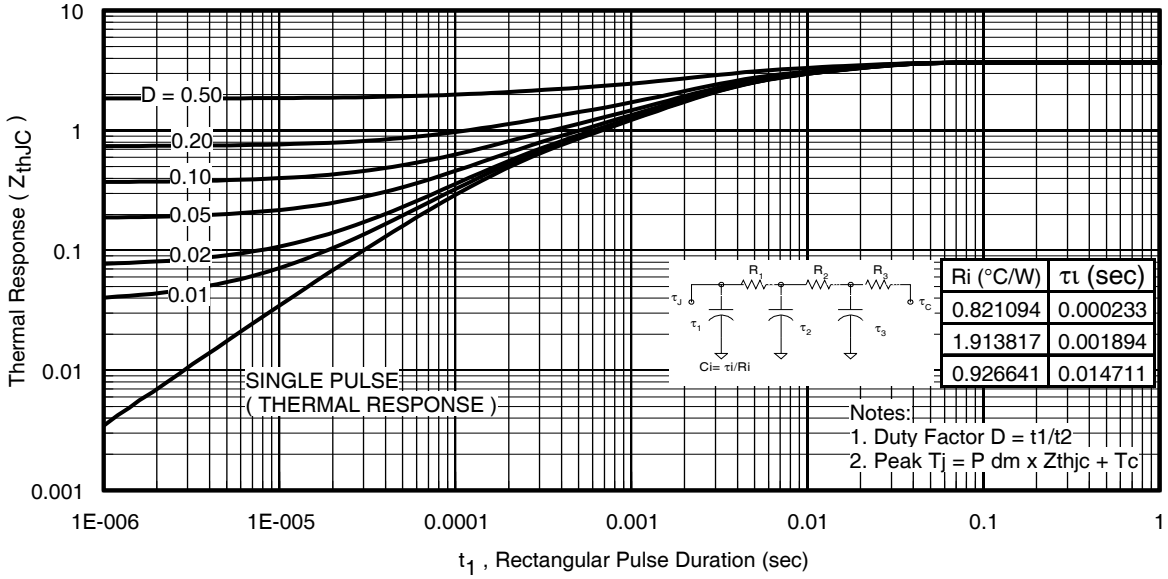

Fig. 26. Maximum Transient Thermal Impedance, Junction-to-Case (DIODE)

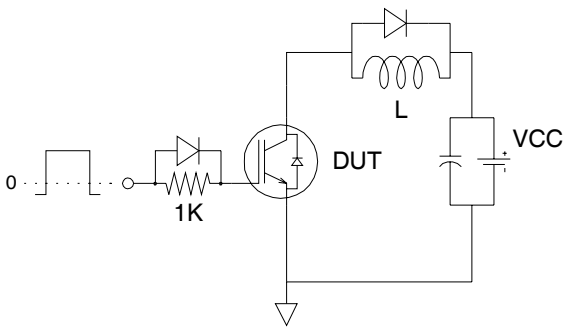

Fig.C.T.1 - Gate Charge Circuit (turn-off)

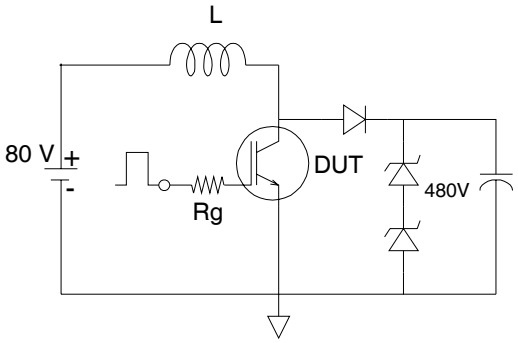

Fig.C.T.2 - RBSOA Circuit

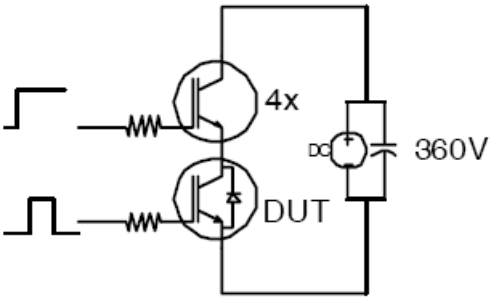

Fig.C.T.3 - S.C.SOA Circuit

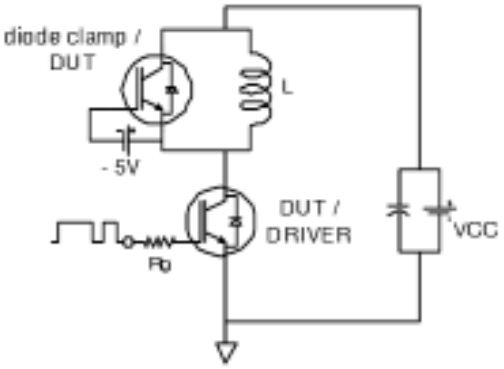

Fig.C.T.4 - Switching Loss Circuit

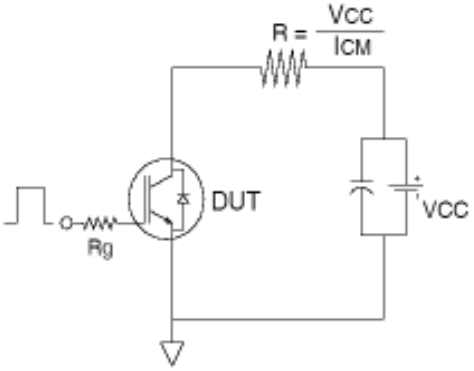

Fig.C.T.5 - Resistive Load Circuit

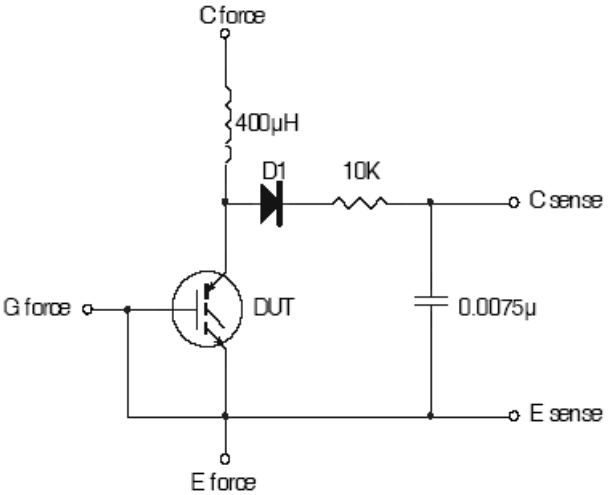

Fig.C.T.6 - Typical Filter Circuit for $V_{(BR)CES}$ Measurement

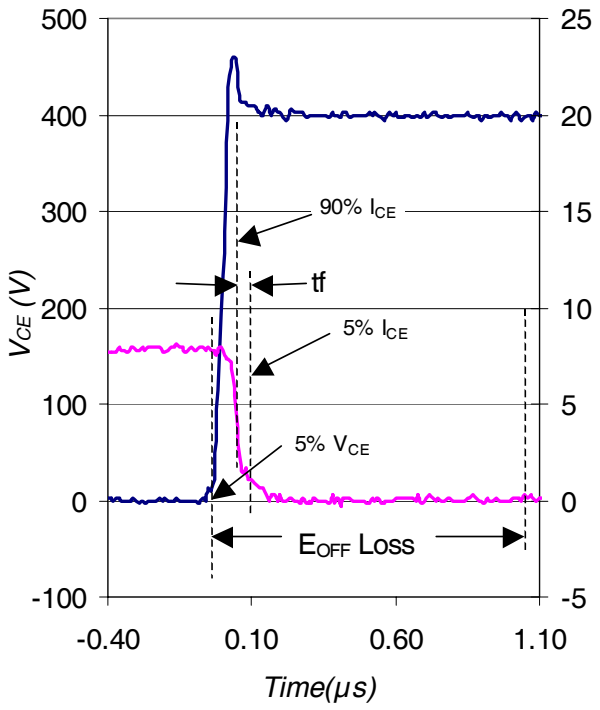

Fig. WF1 - Typ. Turn-off Loss Waveform
@ T_J = 175°C using Fig. CT.4

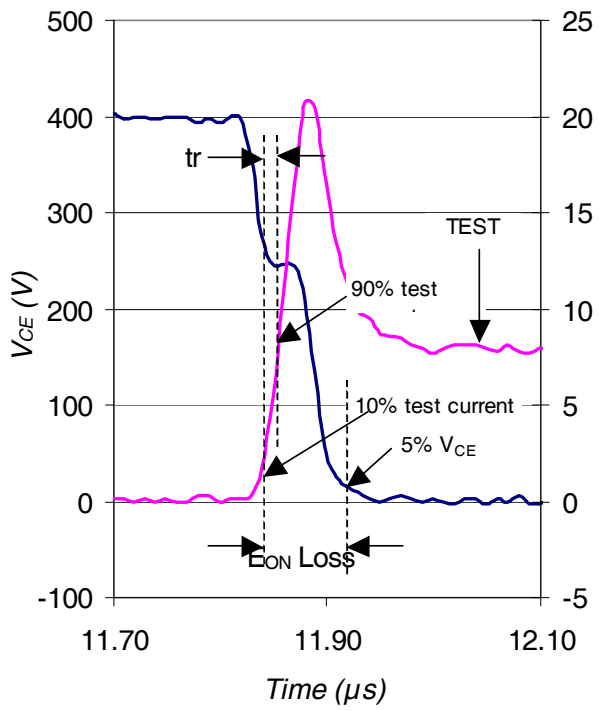

Fig. WF2 - Typ. Turn-on Loss Waveform
@ T_J = 175°C using Fig. CT.4

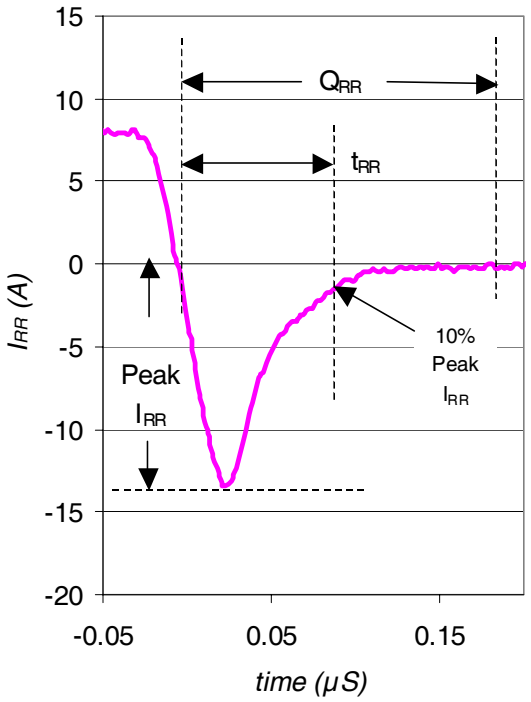

WF.3- Typ. Reverse Recovery Waveform
@ T_J = 175°C using CT.4

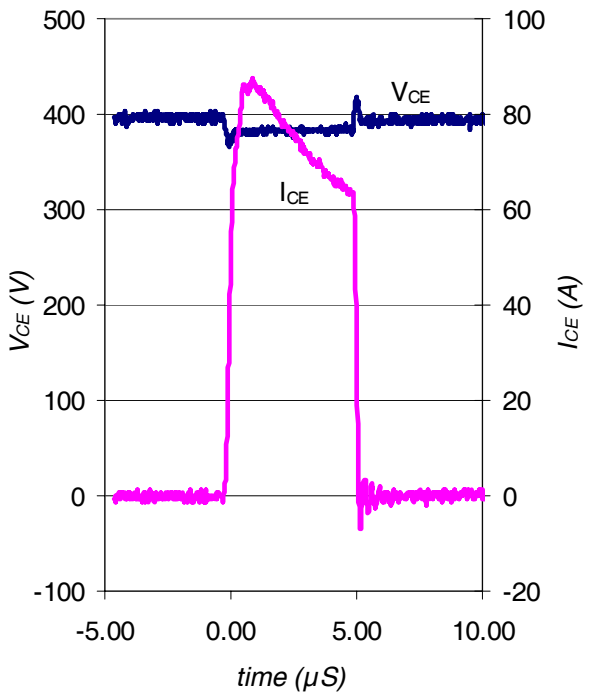

WF.4- Typ. Short Circuit Waveform
@ T_J = 25°C using CT.3

TO-220AB Package Outline (Dimensions are shown in millimeters (inches))

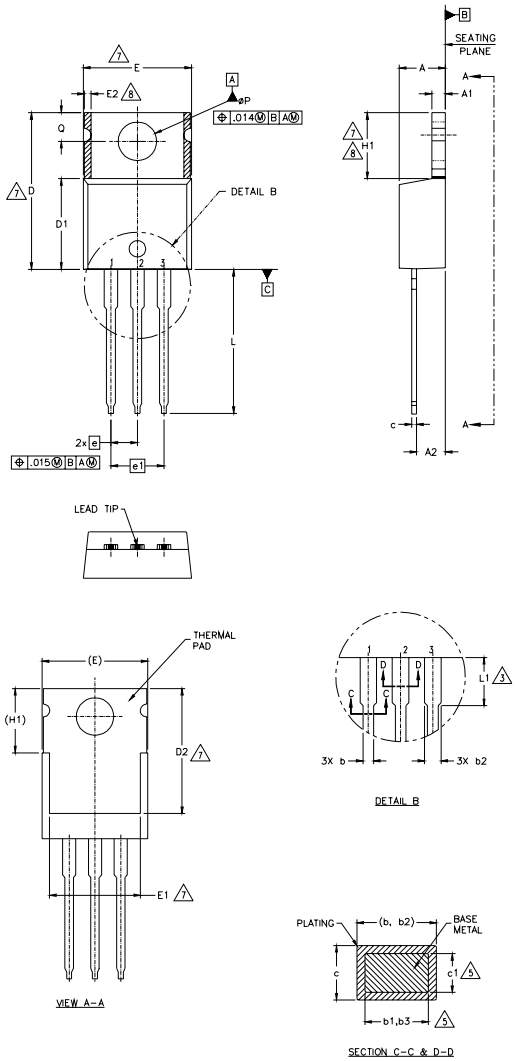

NOTES:

1.– DIMENSIONING AND TOLERANCING AS PER ASME Y14.5 M– 1994.
2.– DIMENSIONS ARE SHOWN IN INCHES [MILLIMETERS].
3.– LEAD DIMENSION AND FINISH UNCONTROLLED IN L1.
4.– DIMENSION D, D1 & E DO NOT INCLUDE MOLD FLASH. MOLD FLASH SHALL NOT EXCEED .005" (0.127) PER SIDE. THESE DIMENSIONS ARE MEASURED AT THE OUTERMOST EXTREMES OF THE PLASTIC BODY.
5.– DIMENSION b1, b3 & c1 APPLY TO BASE METAL ONLY.
6.– CONTROLLING DIMENSION : INCHES.
7.– THERMAL PAD CONTOUR OPTIONAL WITHIN DIMENSIONS E,H1,D2 & E1
8.– DIMENSION E2 X H1 DEFINE A ZONE WHERE STAMPING AND SINGULATION IRREGULARITIES ARE ALLOWED.
9.– OUTLINE CONFORMS TO JEDEC TO-220, EXCEPT A2 (max.) AND D2 (min.) WHERE DIMENSIONS ARE DERIVED FROM THE ACTUAL PACKAGE OUTLINE.

SYMBOL	DIMENSIONS				NOTES
	MILLIMETERS		INCHES		
	MIN.	MAX.	MIN.	MAX.	
A	3.56	4.83	.140	.190	
A1	0.51	1.40	.020	.055	
A2	2.03	2.92	.080	.115	
b	0.38	1.01	.015	.040	
b1	0.38	0.97	.015	.038	5
b2	1.14	1.78	.045	.070	
b3	1.14	1.73	.045	.068	5
c	0.36	0.61	.014	.024	
c1	0.36	0.56	.014	.022	5
D	14.22	16.51	.560	.650	4
D1	8.38	9.02	.330	.355	
D2	11.68	12.88	.460	.507	7
E	9.65	10.67	.380	.420	4,7
E1	6.86	8.89	.270	.350	7
E2	–	0.76	–	.030	8
e	2.54 BSC		.100 BSC		
e1	5.08 BSC		.200 BSC		
H1	5.84	6.86	.230	.270	7,8
L	12.70	14.73	.500	.580	
L1	–	6.35	–	.250	3
øP	3.54	4.08	.139	.161	
Q	2.54	3.42	.100	.135	

LEAD ASSIGNMENTS

HEXFET
1.– GATE
2.– DRAIN
3.– SOURCE

IGBTs, CoPACK
1.– GATE
2.– COLLECTOR
3.– EMITTER

DIODES
1.– ANODE/OPEN
2.– CATHODE
3.– ANODE

TO-220AB Part Marking Information

EXAMPLE: THIS IS AN IRF1010
LOT CODE 1789
ASSEMBLED ON WW 19, 2000
IN THE ASSEMBLY LINE "C"

Note: "P" in assembly line position indicates "Lead - Free"

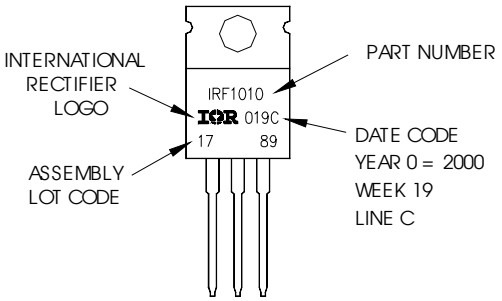

TO-220AB packages are not recommended for Surface Mount Application.

Data and specifications subject to change without notice.
This product has been designed and qualified for Industrial market.
Qualification Standards can be found on IR's Web site.

International
IOR Rectifier

IR WORLD HEADQUARTERS: 233 Kansas St., El Segundo, California 90245, USA Tel: (310) 252-7105
TAC Fax: (310) 252-7903
Visit us at www.irf.com for sales contact information. 09/06

Note: For the most current drawings please refer to the IR website at:
http://www.irf.com/package/