International
IOR Rectifier

PD - 96999B

IRF6616

DirectFET™ Power MOSFET ②

- RoHS compliant containing no lead or bormide ①
- Low Profile (<0.7 mm)
- Dual Sided Cooling Compatible ①
- Ultra Low Package Inductance
- Optimized for High Frequency Switching ①
- Low Conduction and Switching Losses
- Compatible with existing Surface Mount Techniques ①

Typical values (unless otherwise specified)

V_{DSS}	V_{GS}	$R_{DS(on)}$	$R_{DS(on)}$
40V max	±20V max	3.7mΩ@ 10V	4.6mΩ@ 4.5V

$Q_{g\ tot}$	Q_{gd}	Q_{gs2}	Q_{rr}	Q_{oss}	$V_{gs(th)}$
29nC	9.4nC	2.4nC	33nC	15nC	1.8V

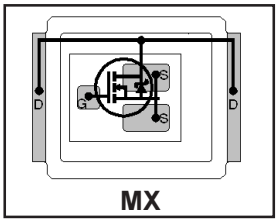

MX

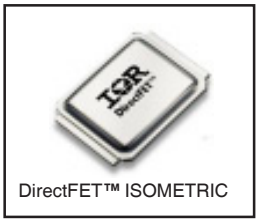
DirectFET™ ISOMETRIC

Applicable DirectFET Outline and Substrate Outline (see p.7,8 for details)①

SQ	SX	ST		MQ	**MX**	MT	MP			

Description

The IRF6616 combines the latest HEXFET® Power MOSFET Silicon technology with the advanced DirectFET™ packaging to achieve low combined on-state and switching loss in a package that has the footprint area of an SO-8 and only 0.7mm profile. The DirectFET package is compatible with existing layout geometries used in power applications, PCB assembly equipment and vapor phase, infra-red or convection soldering techniques, when application note AN-1035 is followed regarding the manufacturing methods and processes. The DirectFET package allows dual sided cooling to maximize thermal transfer in power systems, improving previous best thermal resistance by 80%.

The IRF6616 balances both low resistance and low charge along with ultra low package inductance to reduce both conduction and switching losses. The reduced total losses make this product ideal for high efficiency DC-DC converters that power the latest generation of processors operating at higher frequencies. The IRF6616 is ideal for secondary side synchronous rectification applications up to 100W, and can also be used in some non-isolated synchronous buck applications where 30V devices do not provide enough voltage headroom.

Absolute Maximum Ratings

	Parameter	Max.	Units
V_{DS}	Drain-to-Source Voltage	40	V
V_{GS}	Gate-to-Source Voltage	±20	
I_D @ T_A = 25°C	Continuous Drain Current, V_{GS} @ 10V ③	19	A
I_D @ T_A = 70°C	Continuous Drain Current, V_{GS} @ 10V ③	15	
I_D @ T_C = 25°C	Continuous Drain Current, V_{GS} @ 10V ④	106	
I_{DM}	Pulsed Drain Current ⑤	150	
E_{AS}	Single Pulse Avalanche Energy ⑥	36	mJ
I_{AR}	Avalanche Current ⑤	15	A

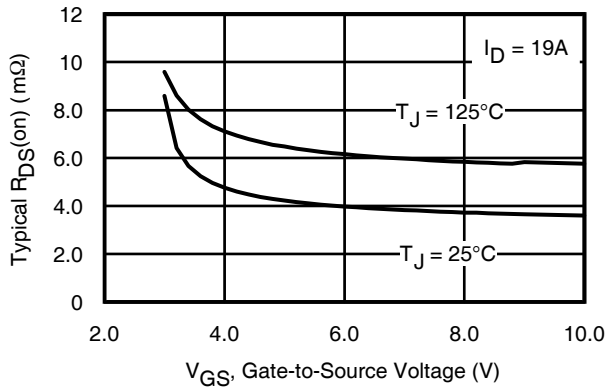

Fig 1. Typical On-Resistance vs. Gate Voltage

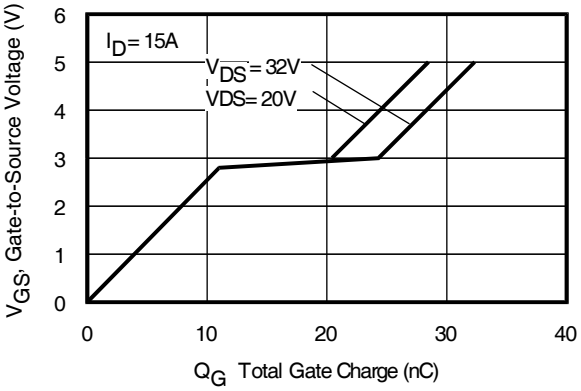

Fig 2. Typical Total Gate Charge vs Gate-to-Source Voltage

Notes:

① Click on this section to link to the appropriate technical paper.
② Click on this section to link to the DirectFET Website.
③ Surface mounted on 1 in. square Cu board, steady state.
④ T_C measured with thermocouple mounted to top (Drain) of part.
⑤ Repetitive rating; pulse width limited by max. junction temperature.
⑥ Starting T_J = 25°C, L = 0.32mH, R_G = 25Ω, I_{AS} =15A.

Static @ T_J = 25°C (unless otherwise specified)

	Parameter	Min.	Typ.	Max.	Units	Conditions
BV_{DSS}	Drain-to-Source Breakdown Voltage	40	—	—	V	V_{GS} = 0V, I_D = 250μA
$\Delta BV_{DSS}/\Delta T_J$	Breakdown Voltage Temp. Coefficient	—	37	—	mV/°C	Reference to 25°C, I_D = 1mA
$R_{DS(on)}$	Static Drain-to-Source On-Resistance	—	3.7	5.0	mΩ	V_{GS} = 10V, I_D = 19A ①
		—	4.6	6.2		V_{GS} = 4.5V, I_D = 15A ①
$V_{GS(th)}$	Gate Threshold Voltage	1.35	1.8	2.25	V	V_{DS} = V_{GS}, I_D = 250μA
$\Delta V_{GS(th)}/\Delta T_J$	Gate Threshold Voltage Coefficient	—	-5.5	—	mV/°C	
I_{DSS}	Drain-to-Source Leakage Current	—	—	1.0	μA	V_{DS} = 32V, V_{GS} = 0V
		—	—	150		V_{DS} = 32V, V_{GS} = 0V, T_J = 125°C
I_{GSS}	Gate-to-Source Forward Leakage	—	—	100	nA	V_{GS} = 20V
	Gate-to-Source Reverse Leakage	—	—	-100		V_{GS} = -20V
gfs	Forward Transconductance	75	—	—	S	V_{DS} = 20V, I_D = 15A
Q_g	Total Gate Charge	—	29	44	nC	
Q_{gs1}	Pre-Vth Gate-to-Source Charge	—	8.6	—		V_{DS} = 20V
Q_{gs2}	Post-Vth Gate-to-Source Charge	—	2.4	—		V_{GS} = 4.5V
Q_{gd}	Gate-to-Drain Charge	—	9.4	—		I_D = 15A
Q_{godr}	Gate Charge Overdrive	—	8.6	—		See Fig. 15
Q_{sw}	Switch Charge (Q_{gs2} + Q_{gd})	—	12	—		
Q_{oss}	Output Charge	—	15	—	nC	V_{DS} = 16V, V_{GS} = 0V
R_G	Gate Resistance	—	1.3	—	Ω	
$t_{d(on)}$	Turn-On Delay Time	—	15	—	ns	V_{DD} = 16V, V_{GS} = 4.5V ①
t_r	Rise Time	—	19	—		I_D = 15A
$t_{d(off)}$	Turn-Off Delay Time	—	21	—		Clamped Inductive Load
t_f	Fall Time	—	4.4	—		
C_{iss}	Input Capacitance	—	3765	—	pF	V_{GS} = 0V
C_{oss}	Output Capacitance	—	560	—		V_{DS} = 20V
C_{rss}	Reverse Transfer Capacitance	—	285	—		f = 1.0MHz

Diode Characteristics

	Parameter	Min.	Typ.	Max.	Units	Conditions
I_S	Continuous Source Current (Body Diode)	—	—	110	A	MOSFET symbol showing the integral reverse p-n junction diode. 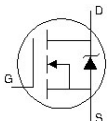
I_{SM}	Pulsed Source Current (Body Diode) ②	—	—	150		
V_{SD}	Diode Forward Voltage	—	0.8	1.0	V	T_J = 25°C, I_S = 15A, V_{GS} = 0V ①
t_{rr}	Reverse Recovery Time	—	15	23	ns	T_J = 25°C, I_F = 15A
Q_{rr}	Reverse Recovery Charge	—	33	50	nC	di/dt = 500A/μs ①

Notes:

① Pulse width ≤ 400μs; duty cycle ≤ 2%.
② Repetitive rating; pulse width limited by max. junction temperature.

Absolute Maximum Ratings

	Parameter	Max.	Units
P_D @T_A = 25°C	Power Dissipation ①	2.8	W
P_D @T_A = 70°C	Power Dissipation ①	1.8	
P_D @T_C = 25°C	Power Dissipation ④	89	
T_P	Peak Soldering Temperature	270	°C
T_J T_{STG}	Operating Junction and Storage Temperature Range	-40 to + 150	

Thermal Resistance

	Parameter	Typ.	Max.	Units
$R_{\theta JA}$	Junction-to-Ambient ①⑤	——	45	
$R_{\theta JA}$	Junction-to-Ambient ②⑤	12.5	——	
$R_{\theta JA}$	Junction-to-Ambient ③⑤	20	——	°C/W
$R_{\theta JC}$	Junction-to-Case ④⑤	——	1.4	
$R_{\theta J\text{-}PCB}$	Junction-to-PCB Mounted	1.0	——	
	Linear Derating Factor ①	0.022		W/°C

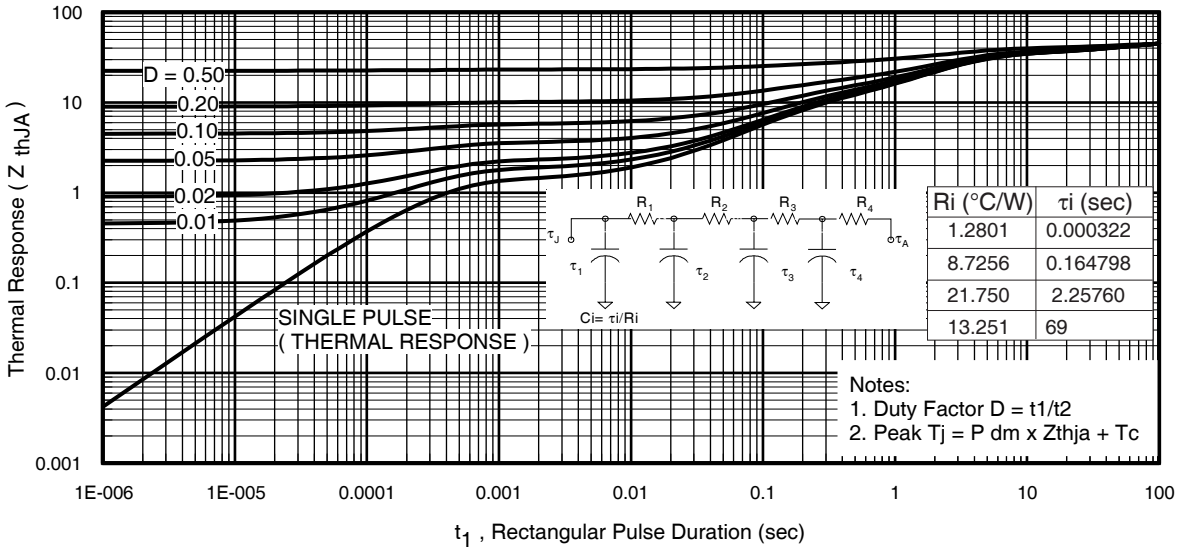

Fig 3. Maximum Effective Transient Thermal Impedance, Junction-to-Ambient ①

Notes:

① Surface mounted on 1 in. square Cu board, steady state.

② Used double sided cooling , mounting pad.

③ Mounted on minimum footprint full size board with metalized back and with small clip heatsink.

④ T_C measured with thermocouple incontact with top (Drain) of part.

⑤ R_θ is measured at T_J of approximately 90°C.

① Surface mounted on 1 in. square Cu board (still air).

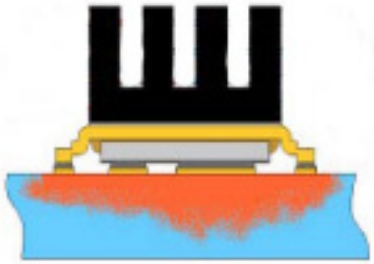

③ Mounted to a PCB with small clip heatsink (still air)

③ Mounted on minimum footprint full size board with metalized back and with small clip heatsink (still air)

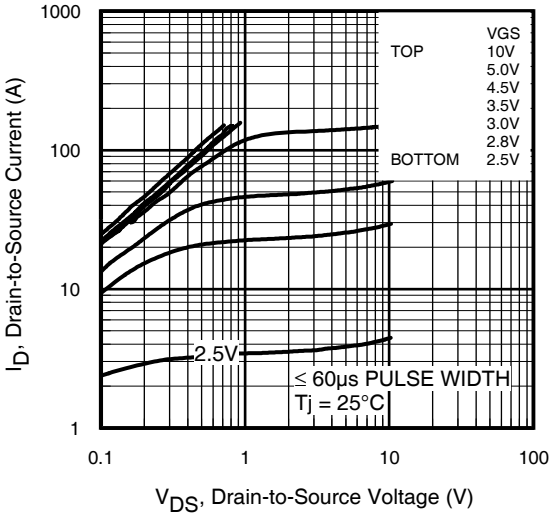

Fig 4. Typical Output Characteristics

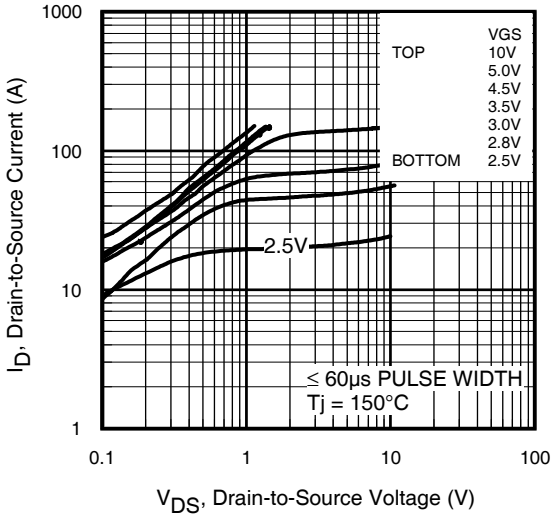

Fig 5. Typical Output Characteristics

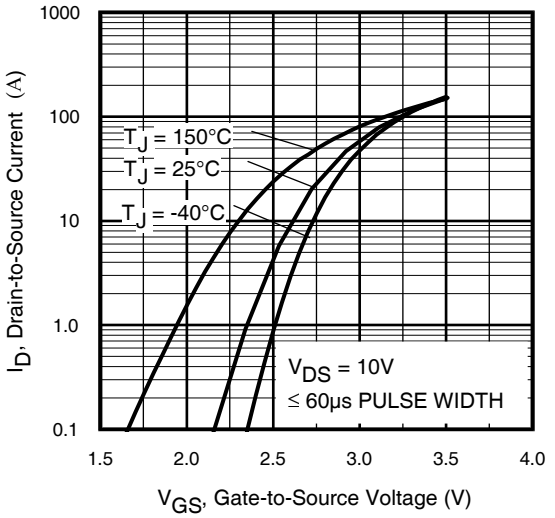

Fig 6. Typical Transfer Characteristics

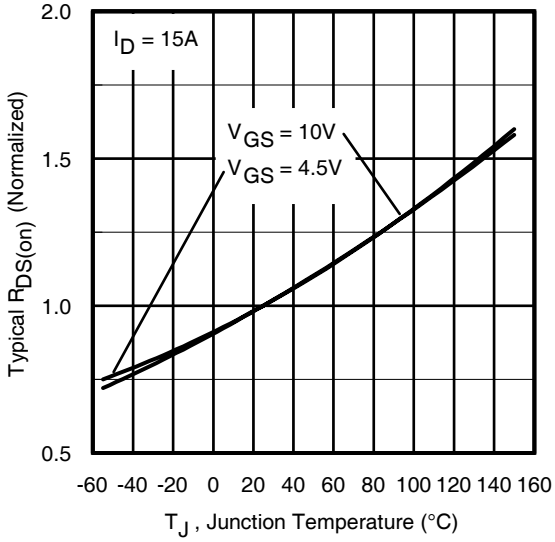

Fig 7. Normalized On-Resistance vs. Temperature

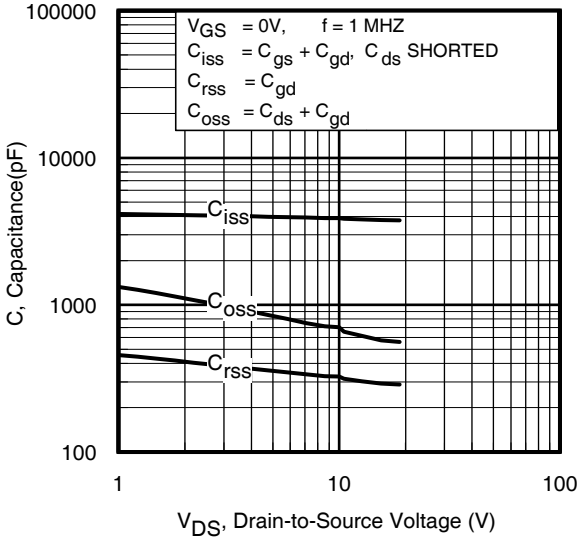

Fig 8. Typical Capacitance vs.Drain-to-Source Voltage

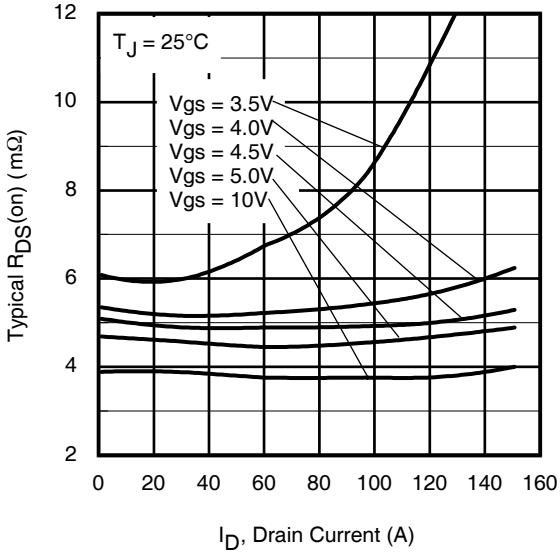

Fig 9. Typical On-Resistance vs. Drain Current and Gate Voltage

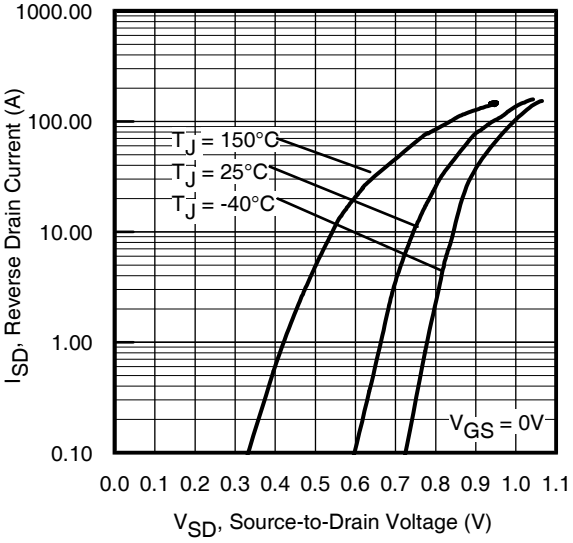

Fig 10. Typical Source-Drain Diode Forward Voltage

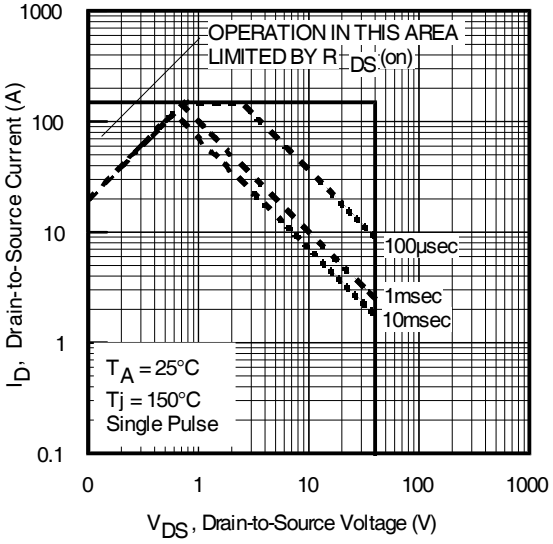

Fig11. Maximum Safe Operating Area

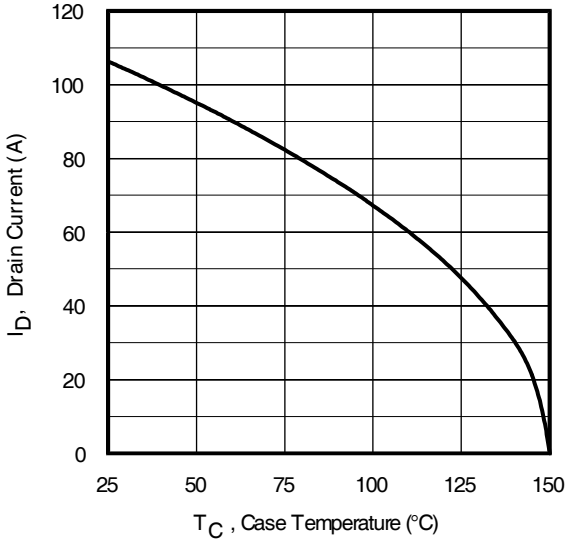

Fig 12. Maximum Drain Current vs. Case Temperature

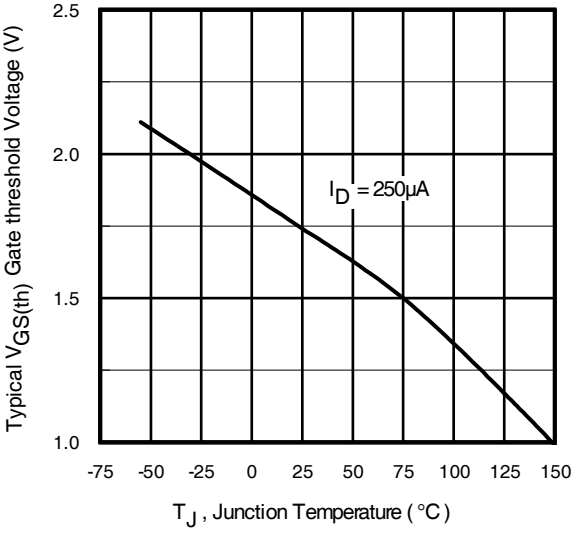

Fig 13. Typical Threshold Voltage vs. Junction Temperature

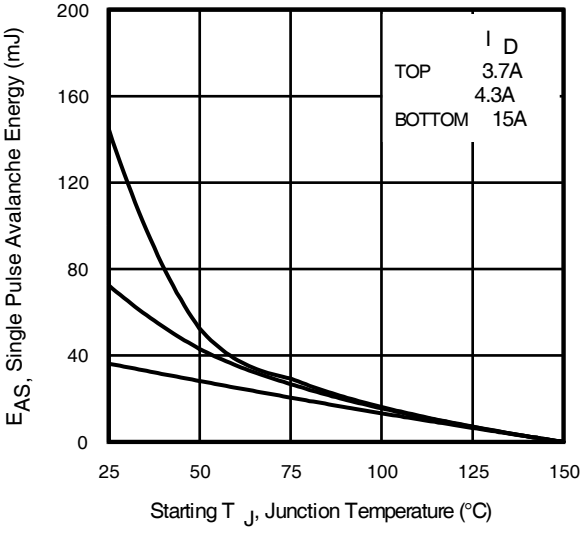

Fig 14. Maximum Avalanche Energy Vs. Drain Current

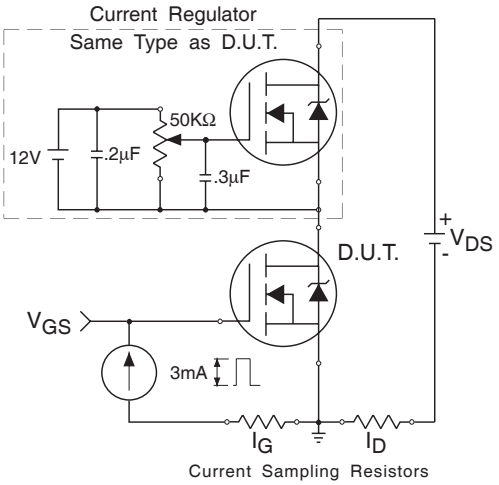

Fig 15a. Gate Charge Test Circuit

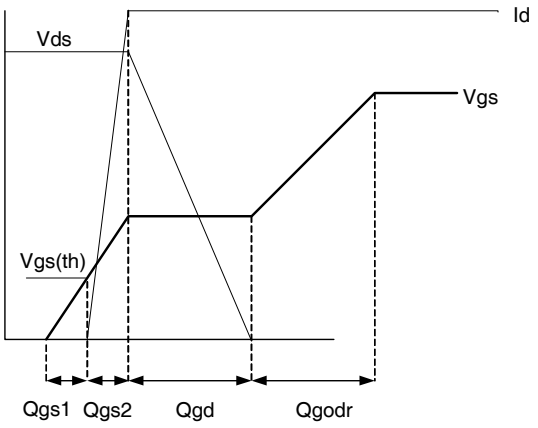

Fig 15b. Gate Charge Waveform

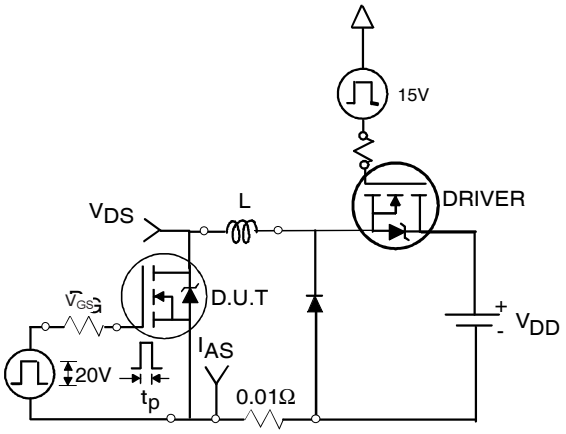

Fig 16a. Unclamped Inductive Test Circuit

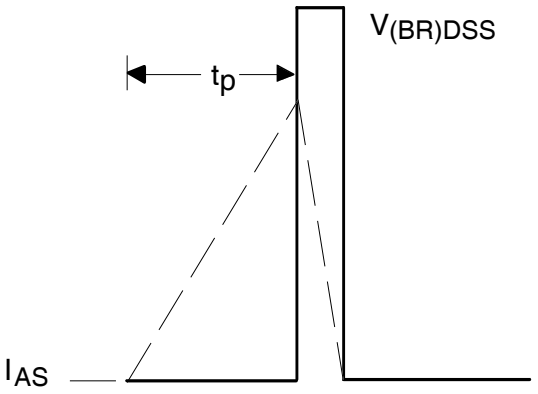

Fig 16b. Unclamped Inductive Waveforms

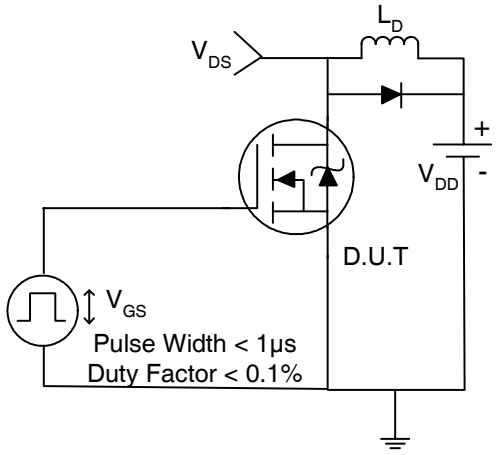

Fig 17a. Switching Time Test Circuit

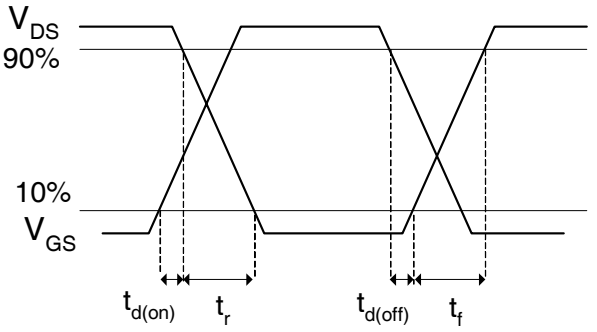

Fig 17b. Switching Time Waveforms

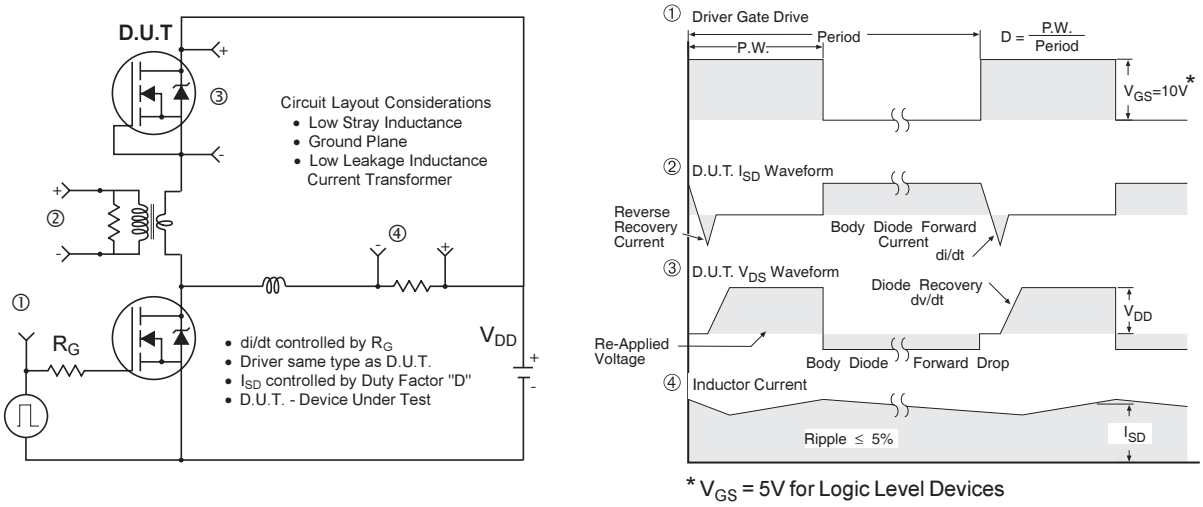

Fig 18. Diode Reverse Recovery Test Circuit for N-Channel HEXFET® Power MOSFETs

DirectFET™ Board Footprint, MX Outline (Medium Size Can, X-Designation).

Please see DirectFET application note AN-1035 for all details regarding the assembly of DirectFET. This includes all recommendations for stencil and substrate designs.

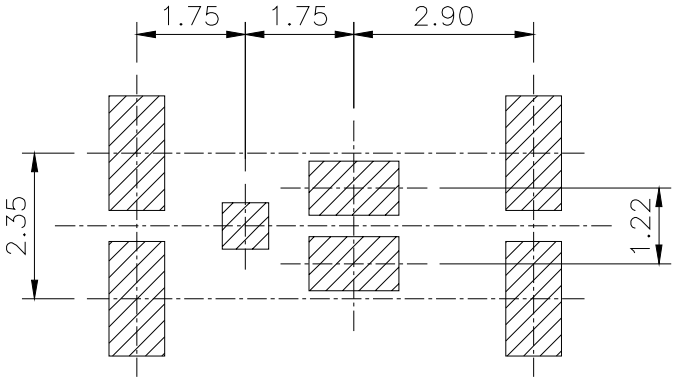

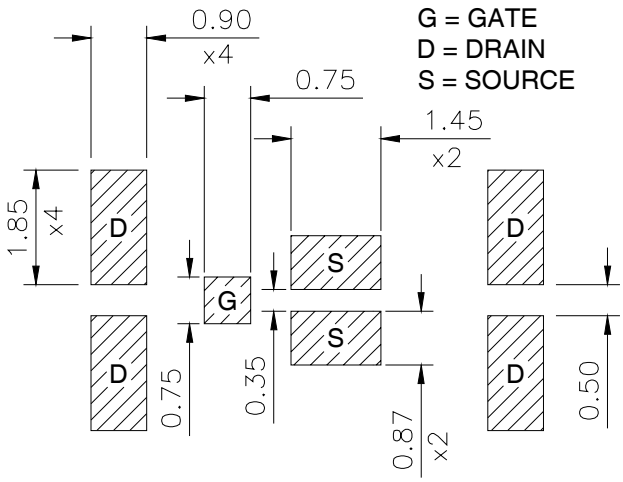

DirectFET™ Outline Dimension, MX Outline (Medium Size Can, X-Designation).

Please see DirectFET application note AN-1035 for all details regarding the assembly of DirectFET. This includes all recommendations for stencil and substrate designs.

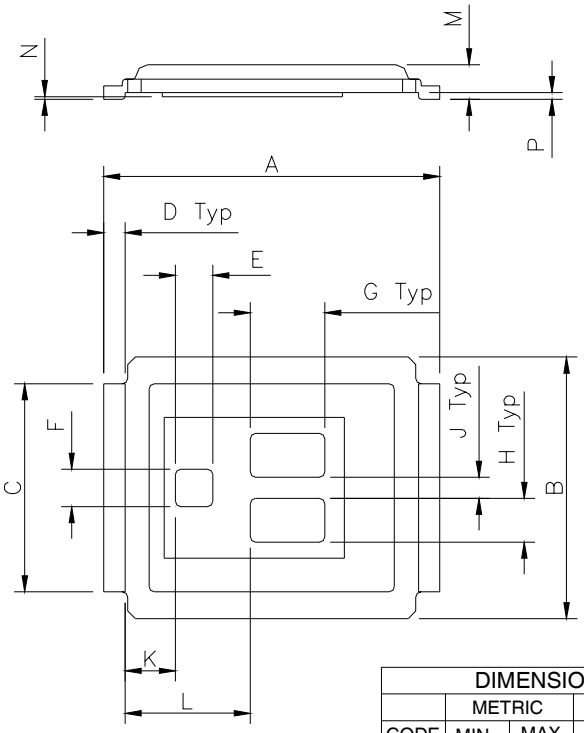

DIMENSIONS				
	METRIC		IMPERIAL	
CODE	MIN	MAX	MIN	MAX
A	6.25	6.35	0.246	0.250
B	4.80	5.05	0.189	0.201
C	3.85	3.95	0.152	0.156
D	0.35	0.45	0.014	0.018
E	0.68	0.72	0.027	0.028
F	0.68	0.72	0.027	0.028
G	1.38	1.42	0.054	0.056
H	0.80	0.84	0.032	0.033
J	0.38	0.42	0.015	0.017
K	0.88	1.01	0.035	0.039
L	2.28	2.41	0.090	0.095
M	0.59	0.70	0.023	0.028
N	0.03	0.08	0.001	0.003
P	0.08	0.17	0.003	0.007

DirectFET™ Part Marking

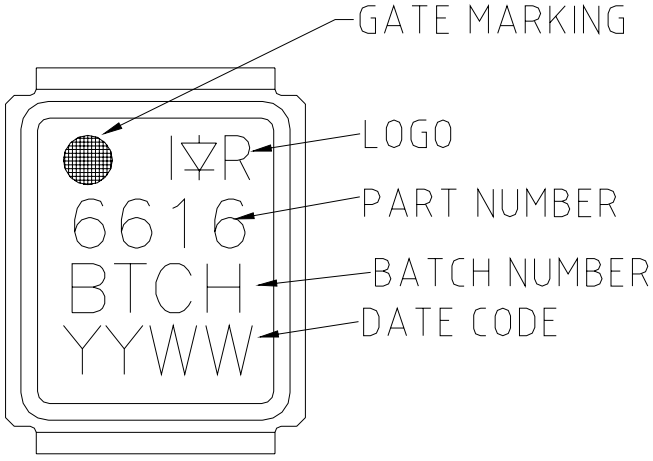

DirectFET™ Tape & Reel Dimension (Showing component orientation).

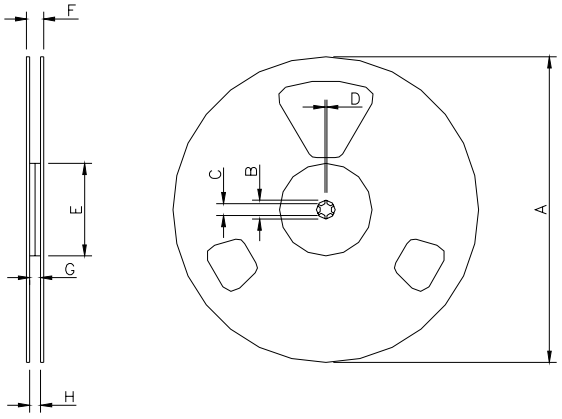

NOTE: Controlling dimensions in mm
Std reel quantity is 4800 parts. (ordered as IRF6616). For 1000 parts on 7" reel, order IRF6616TR1)

REEL DIMENSIONS								
STANDARD OPTION **(QTY 4800)**					TR1 OPTION **(QTY 1000)**			
	METRIC		IMPERIAL		METRIC		IMPERIAL	
CODE	MIN	MAX	MIN	MAX	MIN	MAX	MIN	MAX
A	330.0	N.C	12.992	N.C	177.77	N.C	6.9	N.C
B	20.2	N.C	0.795	N.C	19.06	N.C	0.75	N.C
C	12.8	13.2	0.504	0.520	13.5	12.8	0.53	0.50
D	1.5	N.C	0.059	N.C	1.5	N.C	0.059	N.C
E	100.0	N.C	3.937	N.C	58.72	N.C	2.31	N.C
F	N.C	18.4	N.C	0.724	N.C	13.50	N.C	0.53
G	12.4	14.4	0.488	0.567	11.9	12.01	0.47	N.C
H	11.9	15.4	0.469	0.606	11.9	12.01	0.47	N.C

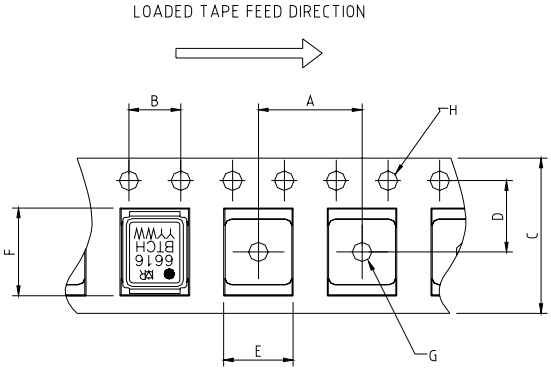

NOTE: CONTROLLING DIMENSIONS IN MM

DIMENSIONS				
	METRIC		IMPERIAL	
CODE	MIN	MAX	MIN	MAX
A	7.90	8.10	0.311	0.319
B	3.90	4.10	0.154	0.161
C	11.90	12.30	0.469	0.484
D	5.45	5.55	0.215	0.219
E	5.10	5.30	0.201	0.209
F	6.50	6.70	0.256	0.264
G	1.50	N.C	0.059	N.C
H	1.50	1.60	0.059	0.063

Data and specifications subject to change without notice.
This product has been designed and qualified for the Consumer market.
Qualification Standards can be found on IR's Web site.

International
IOR Rectifier

IR WORLD HEADQUARTERS: 233 Kansas St., El Segundo, California 90245, USA Tel: (310) 252-7105
TAC Fax: (310) 252-7903
Visit us at www.irf.com for sales contact information.11/05

Note: For the most current drawings please refer to the IR website at:
http://www.irf.com/package/