International
IOR Rectifier

PD - 97263A

IRF1324S-7PPbF

HEXFET® Power MOSFET

Applications

- High Efficiency Synchronous Rectification in SMPS
- Uninterruptible Power Supply
- High Speed Power Switching
- Hard Switched and High Frequency Circuits

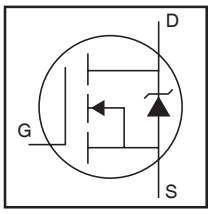

V_{DSS}		24V
$R_{DS(on)}$	typ.	0.8mΩ
	max.	1.0mΩ
I_D		429A

Benefits

- Improved Gate, Avalanche and Dynamic dV/dt Ruggedness
- Fully Characterized Capacitance and Avalanche SOA
- Enhanced body diode dV/dt and dI/dt Capability
- Lead-Free

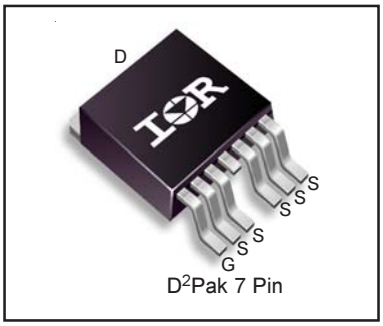

G	D	S
Gate	Drain	Source

Absolute Maximum Ratings

Symbol	Parameter	Max.	Units
I_D @ T_C = 25°C	Continuous Drain Current, V_{GS} @ 10V	429①	A
I_D @ T_C = 100°C	Continuous Drain Current, V_{GS} @ 10V	303①	
I_{DM}	Pulsed Drain Current ②	1640	
P_D @T_C = 25°C	Maximum Power Dissipation	300	W
	Linear Derating Factor	2.0	W/°C
V_{GS}	Gate-to-Source Voltage	± 20	V
dv/dt	Peak Diode Recovery ④	1.6	V/ns
T_J T_{STG}	Operating Junction and Storage Temperature Range	-55 to + 175	°C
	Soldering Temperature, for 10 seconds (1.6mm from case)	300	
	Mounting torque, 6-32 or M3 screw	10lb·in (1.1N·m)	

Avalanche Characteristics

$E_{AS\ (Thermally\ limited)}$	Single Pulse Avalanche Energy ③	230	mJ
I_{AR}	Avalanche Current ①	See Fig. 14, 15, 22a, 22b,	A
E_{AR}	Repetitive Avalanche Energy ⑤		mJ

Thermal Resistance

Symbol	Parameter	Typ.	Max.	Units
$R_{\theta JC}$	Junction-to-Case ⑨	——	0.50	°C/W
$R_{\theta JA}$	Junction-to-Ambient (PCB Mount) , D^2Pak ⑧⑨	——	40	

09/29/09

Static @ T_J = 25°C (unless otherwise specified)

Symbol	Parameter	Min.	Typ.	Max.	Units	Conditions
$V_{(BR)DSS}$	Drain-to-Source Breakdown Voltage	24	—	—	V	V_{GS} = 0V, I_D = 250μA
$\Delta V_{(BR)DSS}/\Delta T_J$	Breakdown Voltage Temp. Coefficient	—	0.023	—	V/°C	Reference to 25°C, I_D = 5mA②
$R_{DS(on)}$	Static Drain-to-Source On-Resistance	—	0.80	1.0	mΩ	V_{GS} = 10V, I_D = 160A ⑤
$V_{GS(th)}$	Gate Threshold Voltage	2.0	—	4.0	V	V_{DS} = V_{GS}, I_D = 250μA
I_{DSS}	Drain-to-Source Leakage Current	—	—	20	μA	V_{DS} = 24V, V_{GS} = 0V
		—	—	250		V_{DS} = 19V, V_{GS} = 0V, T_J = 125°C
I_{GSS}	Gate-to-Source Forward Leakage	—	—	200	nA	V_{GS} = 20V
	Gate-to-Source Reverse Leakage	—	—	-200		V_{GS} = -20V
R_G	Internal Gate Resistance	—	3.0	—	Ω	

Dynamic @ T_J = 25°C (unless otherwise specified)

Symbol	Parameter	Min.	Typ.	Max.	Units	Conditions
gfs	Forward Transconductance	270	—	—	S	V_{DS} = 50V, I_D = 160A
Q_g	Total Gate Charge	—	180	252	nC	I_D = 75A
Q_{gs}	Gate-to-Source Charge	—	47	—		V_{DS} =12V
Q_{gd}	Gate-to-Drain ("Miller") Charge	—	58	—		V_{GS} = 10V ⑤
Q_{sync}	Total Gate Charge Sync. (Q_g - Q_{gd})	—	122	—		I_D = 75A, V_{DS} =0V, V_{GS} = 10V ⑤
$t_{d(on)}$	Turn-On Delay Time	—	19	—	ns	V_{DD} = 16V
t_r	Rise Time	—	240	—		I_D = 160A
$t_{d(off)}$	Turn-Off Delay Time	—	86	—		R_G =2.7Ω
t_f	Fall Time	—	93	—		V_{GS} = 10V ⑤
C_{iss}	Input Capacitance	—	7700	—	pF	V_{GS} = 0V
C_{oss}	Output Capacitance	—	3380	—		V_{DS} = 19V
C_{rss}	Reverse Transfer Capacitance	—	1930	—		f = 1.0MHz, See Fig.5
C_{oss} eff. (ER)	Effective Output Capacitance (Energy Related)	—	4780	—		V_{GS} = 0V, V_{DS} = 0V to 19V ⑦, See Fig.11
C_{oss} eff. (TR)	Effective Output Capacitance (Time Related)⑥	—	4970	—		V_{GS} = 0V, V_{DS} = 0V to 19V ⑥

Diode Characteristics

Symbol	Parameter	Min.	Typ.	Max.	Units	Conditions
I_S	Continuous Source Current (Body Diode)	—	—	429①	A	MOSFET symbol showing the integral reverse p-n junction diode. 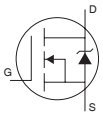
I_{SM}	Pulsed Source Current (Body Diode) ②	—	—	1636	A	
V_{SD}	Diode Forward Voltage	—	—	1.3	V	T_J = 25°C, I_S = 160A, V_{GS} = 0V ⑤
t_{rr}	Reverse Recovery Time	—	71	107	ns	T_J = 25°C V_R = 20V,
		—	74	110		T_J = 125°C I_F = 160A
Q_{rr}	Reverse Recovery Charge	—	83	120	nC	T_J = 25°C di/dt = 100A/μs ⑤
		—	92	140		T_J = 125°C
I_{RRM}	Reverse Recovery Current	—	2.0	—	A	T_J = 25°C
t_{on}	Forward Turn-On Time	Intrinsic turn-on time is negligible (turn-on is dominated by LS+LD)				

Notes:

① Calculated continuous current based on maximum allowable junction temperature. Package limitation current is 160A.

② Repetitive rating; pulse width limited by max. junction temperature.

③ Limited by T_{Jmax}, starting T_J = 25°C, L = 0.018mH R_G = 25Ω, I_{AS} = 160A, V_{GS} =10V. Part not recommended for use above this value.

④ $I_{SD} \leq$ 160A, di/dt $\leq$ 600A/μs, $V_{DD} \leq V_{(BR)DSS}$, $T_J \leq$ 175°C.

⑤ Pulse width $\leq$ 400μs; duty cycle $\leq$ 2%.

⑥ C_{oss} eff. (TR) is a fixed capacitance that gives the same charging time as C_{oss} while V_{DS} is rising from 0 to 80% V_{DSS}.

⑦ C_{oss} eff. (ER) is a fixed capacitance that gives the same energy as C_{oss} while V_{DS} is rising from 0 to 80% V_{DSS}.

⑧ When mounted on 1" square PCB (FR-4 or G-10 Material). For recom mended footprint and soldering techniques refer to application note #AN-994.

⑨ R_θ is measured at T_J approximately 90°C

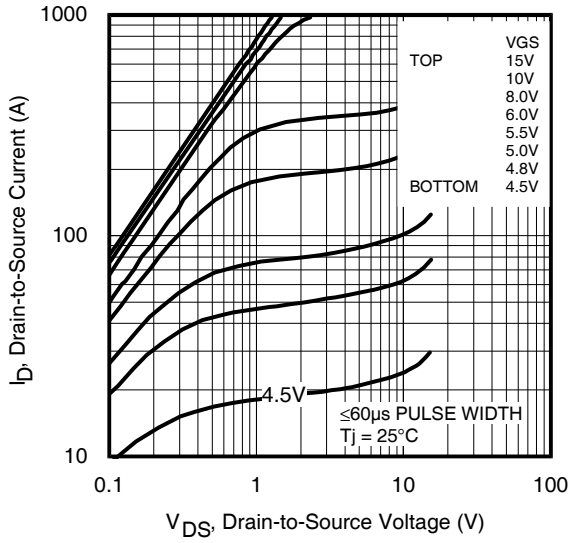

Fig 1. Typical Output Characteristics

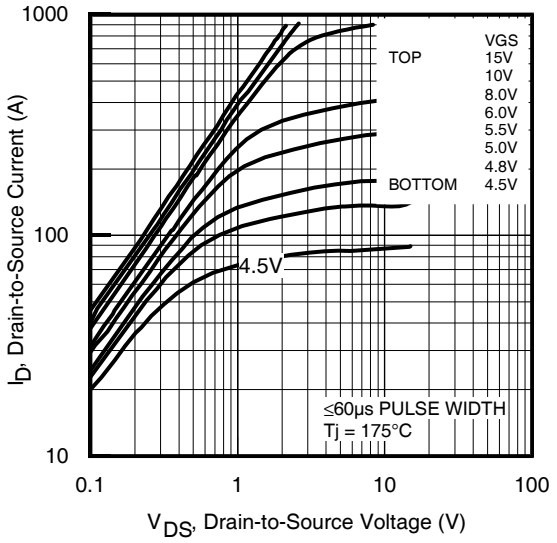

Fig 2. Typical Output Characteristics

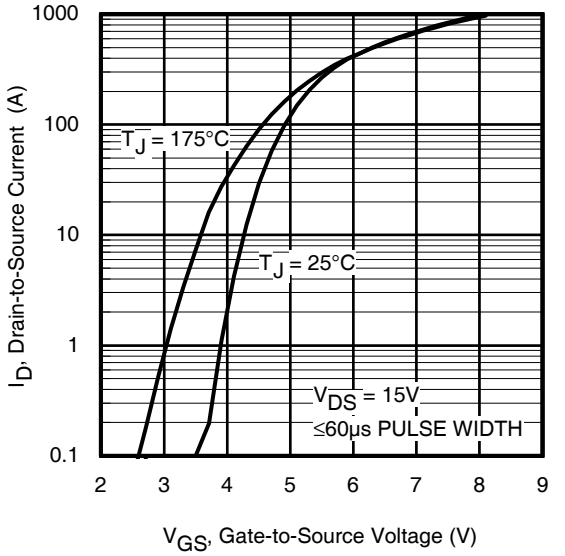

Fig 3. Typical Transfer Characteristics

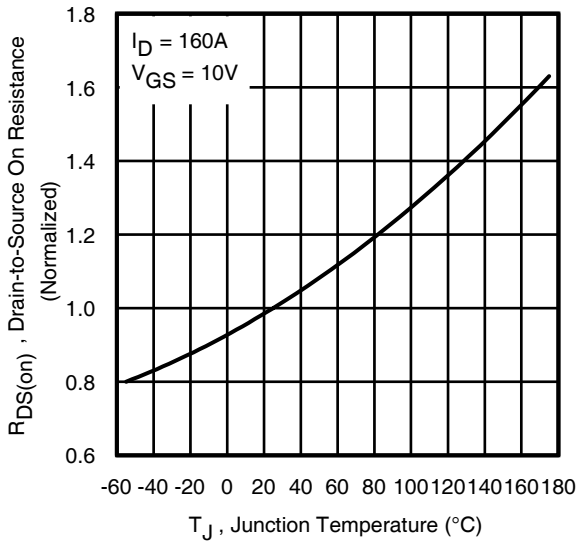

Fig 4. Normalized On-Resistance vs. Temperature

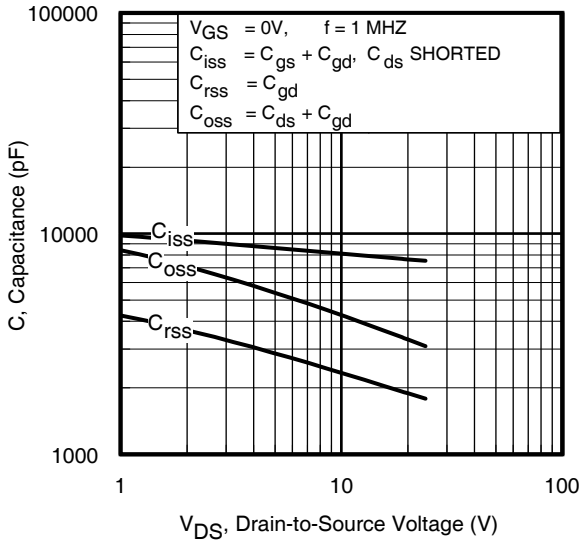

Fig 5. Typical Capacitance vs. Drain-to-Source Voltage

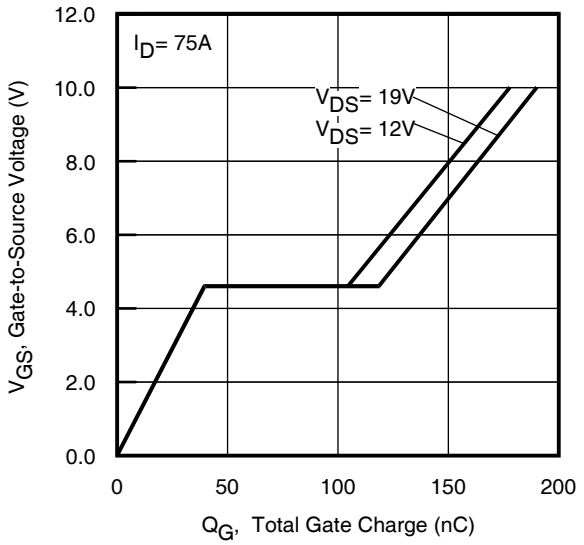

Fig 6. Typical Gate Charge vs. Gate-to-Source Voltage

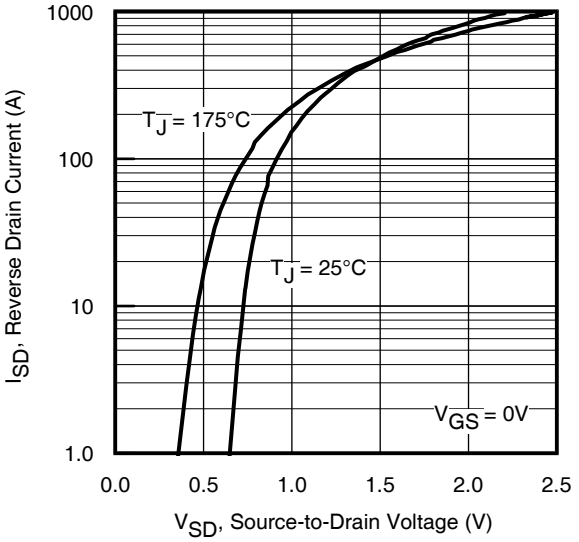

Fig 7. Typical Source-Drain Diode Forward Voltage

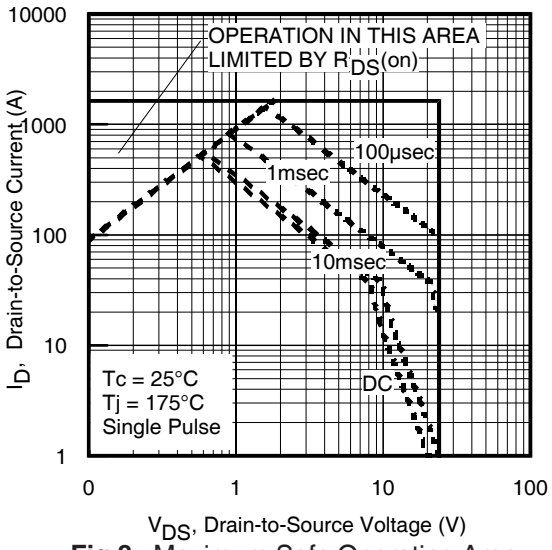

Fig 8. Maximum Safe Operating Area

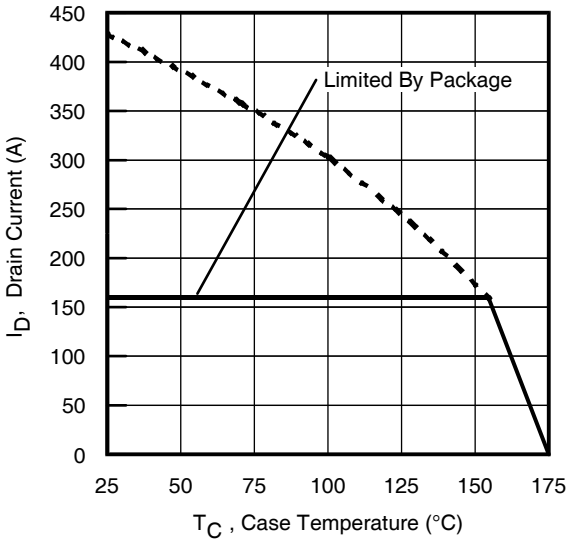

Fig 9. Maximum Drain Current vs. Case Temperature

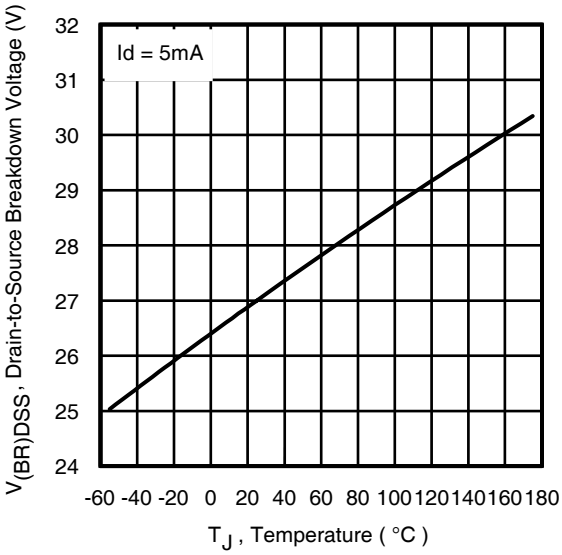

Fig 10. Drain-to-Source Breakdown Voltage

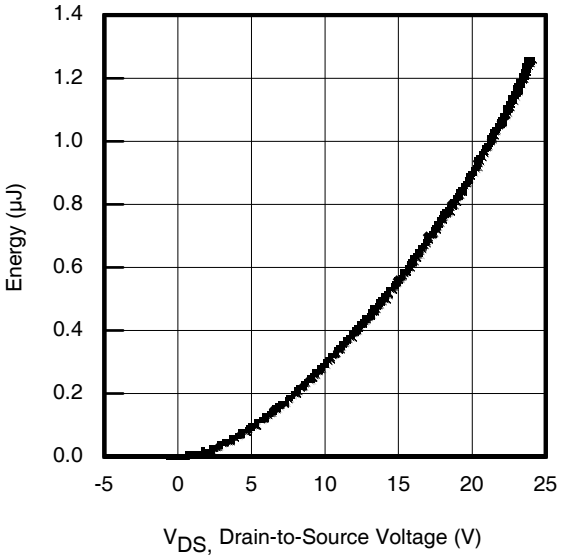

Fig 11. Typical C_{OSS} Stored Energy

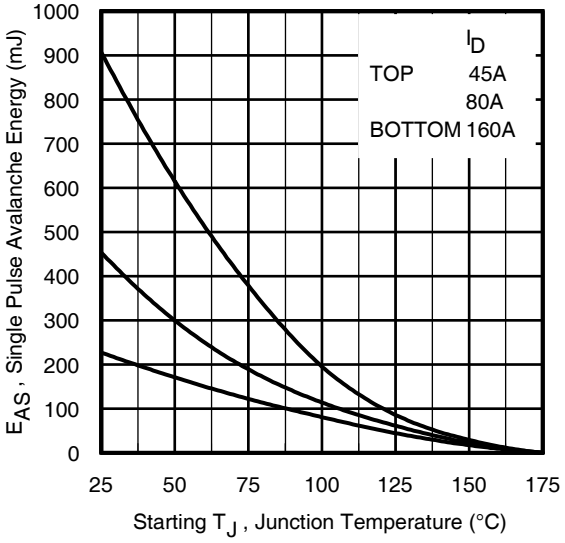

Fig 12. Maximum Avalanche Energy vs. DrainCurrent

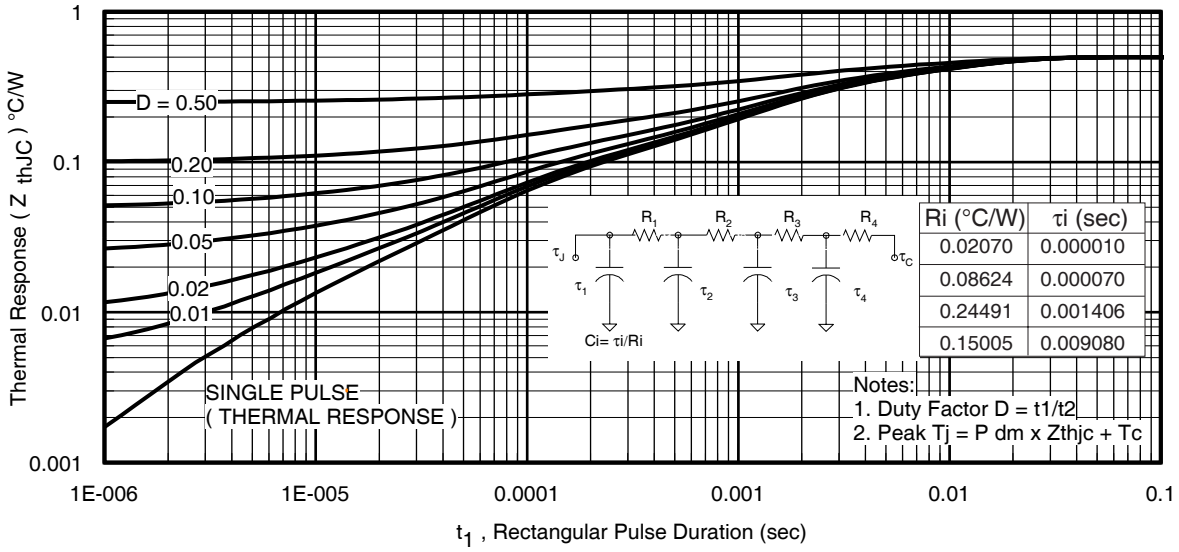

Fig 13. Maximum Effective Transient Thermal Impedance, Junction-to-Case

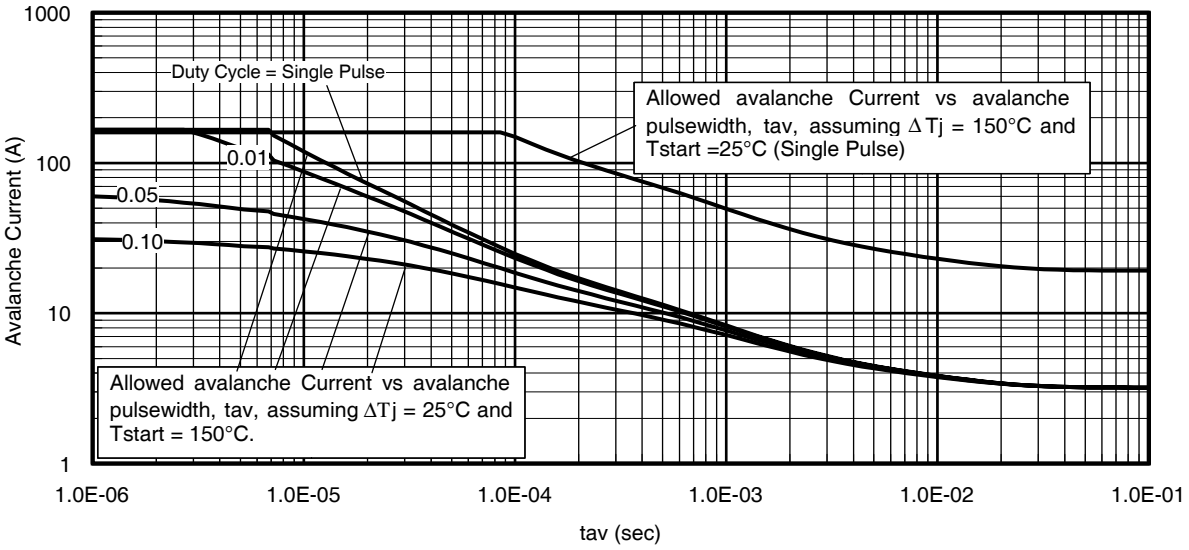

Fig 14. Typical Avalanche Current vs.Pulsewidth

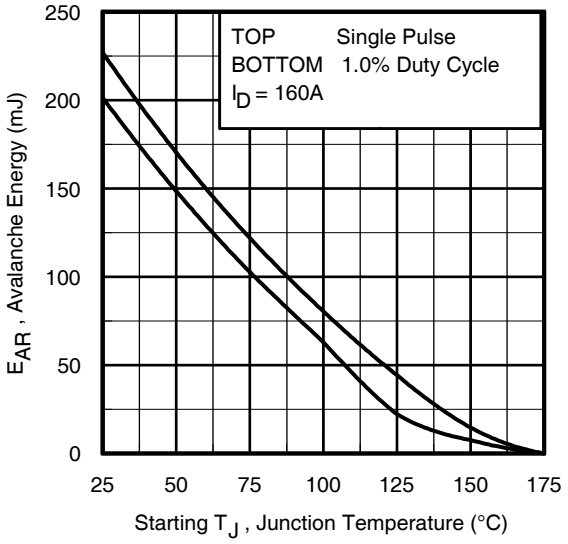

Fig 15. Maximum Avalanche Energy vs. Temperature

Notes on Repetitive Avalanche Curves , Figures 14, 15:
(For further info, see AN-1005 at www.irf.com)

1. Avalanche failures assumption:
   Purely a thermal phenomenon and failure occurs at a temperature far in excess of T_{jmax}. This is validated for every part type.
2. Safe operation in Avalanche is allowed as long as T_{jmax} is not exceeded.
3. Equation below based on circuit and waveforms shown in Figures 16a, 16b.
4. $P_{D\ (ave)}$ = Average power dissipation per single avalanche pulse.
5. BV = Rated breakdown voltage (1.3 factor accounts for voltage increase during avalanche).
6. I_{av} = Allowable avalanche current.
7. ΔT = Allowable rise in junction temperature, not to exceed T_{jmax} (assumed as 25°C in Figure 14, 15).
   t_{av} = Average time in avalanche.
   D = Duty cycle in avalanche = $t_{av} \cdot f$
   $Z_{thJC}(D, t_{av})$ = Transient thermal resistance, see Figures 13)

$$P_{D\ (ave)} = 1/2\ (1.3 \cdot BV \cdot I_{av}) = \Delta T / Z_{thJC}$$
$$I_{av} = 2\Delta T / [1.3 \cdot BV \cdot Z_{th}]$$
$$E_{AS\ (AR)} = P_{D\ (ave)} \cdot t_{av}$$

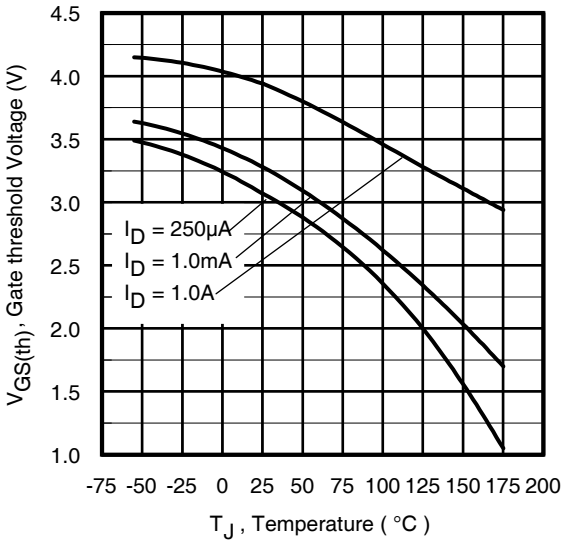

Fig 16. Threshold Voltage Vs. Temperature

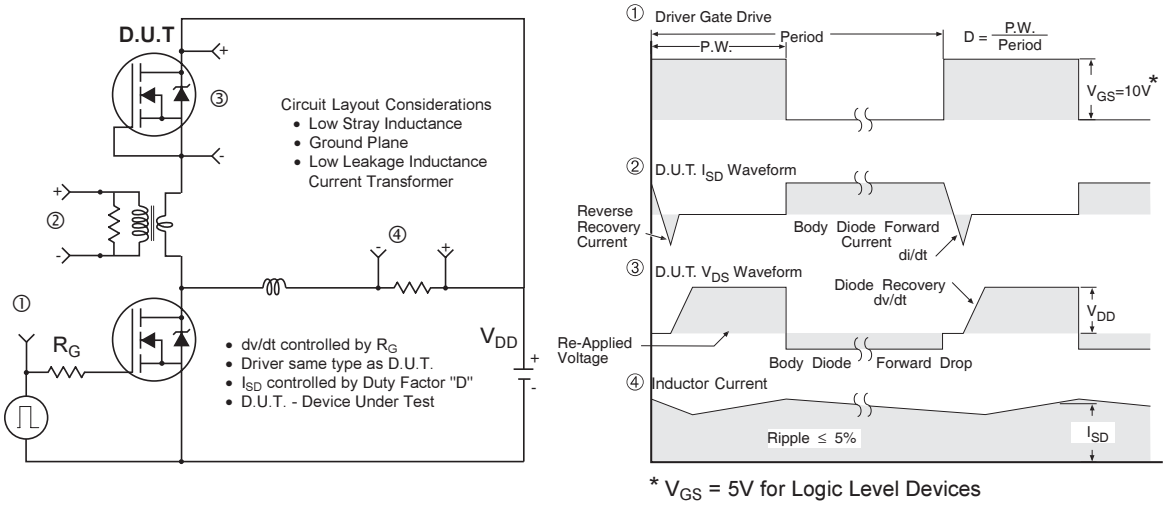

Fig 21. Peak Diode Recovery dv/dt Test Circuit for N-Channel HEXFET® Power MOSFETs

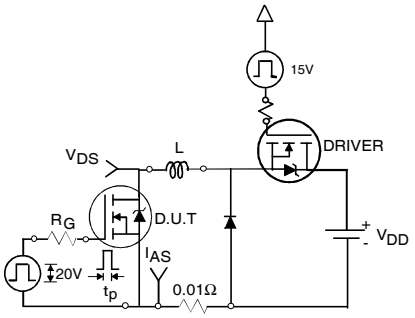

Fig 22a. Unclamped Inductive Test Circuit

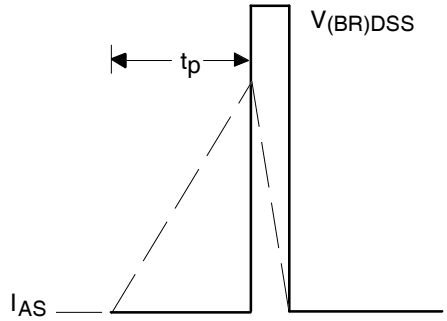

Fig 22b. Unclamped Inductive Waveforms

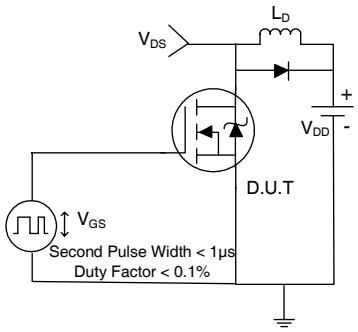

Fig 23a. Switching Time Test Circuit

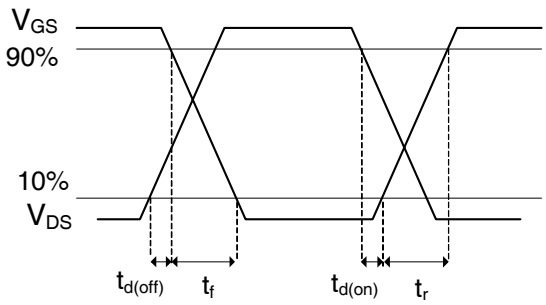

Fig 23b. Switching Time Waveforms

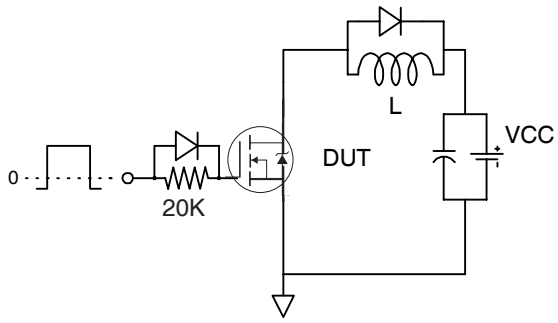

Fig 24a. Gate Charge Test Circuit

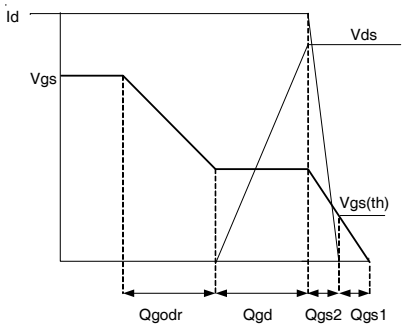

Fig 24b. Gate Charge Waveform

D²Pak - 7 Pin Package Outline

Dimensions are shown in millimeters (inches)

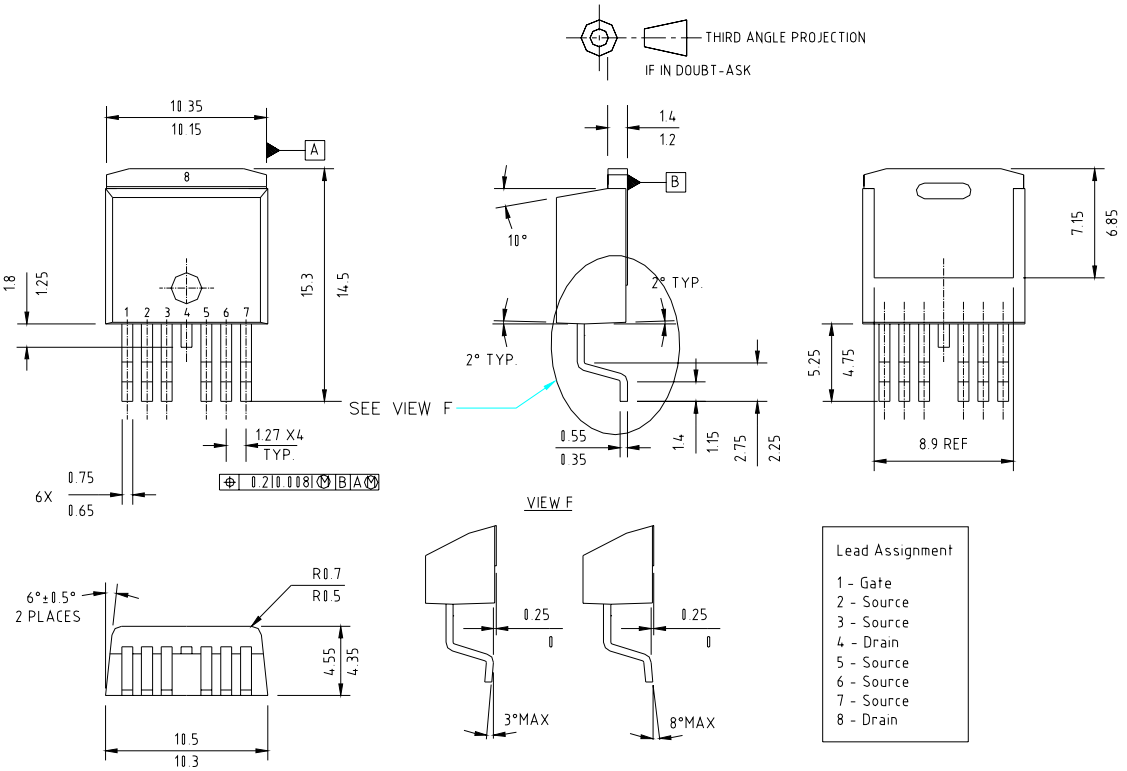

RECOMMENDED FOOTPRINT

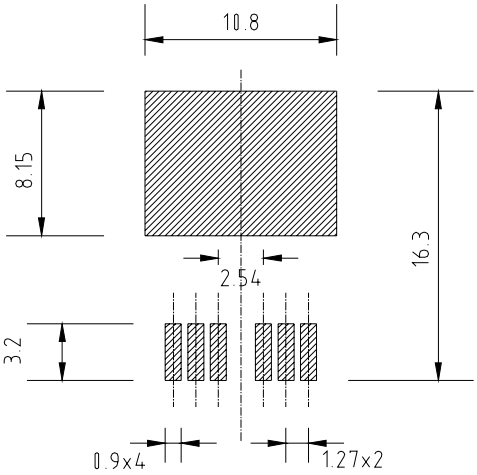

REV	DATE	MODIFICATION
-	18/03/03	RAISED IAW ECN 3426
Rev1	07/04/03	CHANGED IAW ECN 3438
A	23/04/04	ADD LEAD ASSIGNMENT

Note: For the most current drawing please refer to IR website at http://www.irf.com/package/

D²Pak - 7 Pin Part Marking Information

EXAMPLE: THIS IS AN IRF2804S-7P WITH
LOT CODE 8024
ASSEMBLED ON WW02,2000
IN THE ASSEMBLY LINE "L"

Note: "P" in assembly line position indicates "Lead Free"

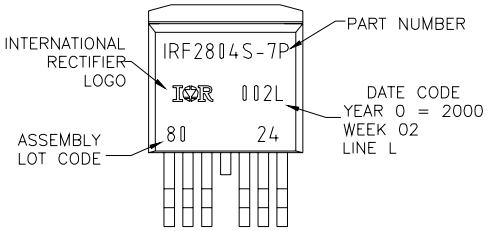

OR

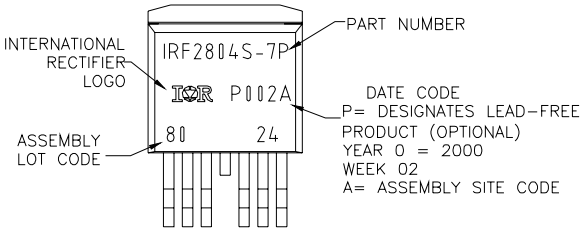

D²Pak - 7 Pin Tape and Reel

NOTES, TAPE & REEL, LABELLING:

1. TAPE AND REEL.
   - 1.1 REEL SIZE 13 INCH DIAMETER.
   - 1.2 EACH REEL CONTAINING 800 DEVICES.
   - 1.3 THERE SHALL BE A MINIMUM OF 42 SEALED POCKETS CONTAINED IN THE LEADER AND A MINIMUM OF 15 SEALED POCKETS IN THE TRAILER.
   - 1.4 PEEL STRENGTH MUST CONFORM TO THE SPEC. NO. 71-9667.
   - 1.5 PART ORIENTATION SHALL BE AS SHOWN BELOW.
   - 1.6 REEL MAY CONTAIN A MAXIMUM OF TWO UNIQUE LOT CODE/DATE CODE COMBINATIONS. REWORKED REELS MAY CONTAIN A MAXIMUM OF THREE UNIQUE LOT CODE/DATE CODE COMBINATIONS. HOWEVER, THE LOT CODES AND DATE CODES WITH THEIR RESPECTIVE QUANTITIES SHALL APPEAR ON THE BAR CODE LABEL FOR THE AFFECTED REEL.

2. LABELLING (REEL AND SHIPPING BAG).
   - 2.1 CUST. PART NUMBER (BAR CODE): IRFXXXXSTRL-7P
   - 2.2 CUST. PART NUMBER (TEXT CODE): IRFXXXXSTRL-7P
   - 2.3 I.R. PART NUMBER: IRFXXXXSTRL-7P
   - 2.4 QUANTITY:
   - 2.5 VENDOR CODE: IR
   - 2.6 LOT CODE:
   - 2.7 DATE CODE:

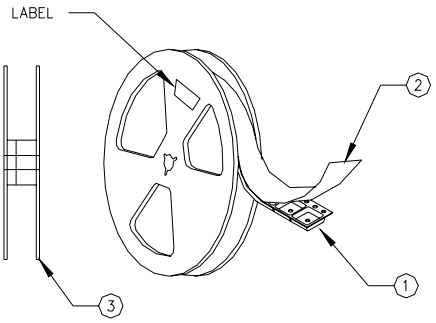

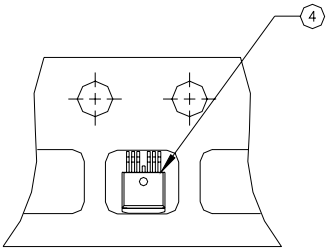

Note: For the most current drawing please refer to IR website at http://www.irf.com/package/

Data and specifications subject to change without notice.
This product has been designed and qualified for the Industrial market.
Qualification Standards can be found on IR's Web site.

International
IOR Rectifier

IR WORLD HEADQUARTERS: 233 Kansas St., El Segundo, California 90245, USA Tel: (310) 252-7105
TAC Fax: (310) 252-7903
Visit us at www.irf.com for sales contact information. 09/09